CITY OF TEHACHAPI CALIFORNIA

Kern County, California

Subdivision and Development Standards

February 2006

Conformed with Addendum No. 1

and Addendum No. 2

February 2015

CITY OF TEHACHAPI CALIFORNIA

Kern County, California

Subdivision and Development Standards

February 2006

Conformed with Addendum No. 1
and Addendum No. 2
February 2015

CITY OF TEHACHAPI
SUBDIVISION AND DEVELOPMENT STANDARDS
FEBRUARY 2015

MASTER TABLE OF CONTENTS

DIVISION ONE GENERAL PROVISIONS 1-1

1.1 DEFINITIONS, TERMS AND ABBREVIATIONS 1-1
1.1.1 Definitions 1-1
1.1.2 Terms 1-5
1.1.3 Abbreviations 1-5

1.2 APPLICABILITY 1-6

1.3 DESCRIPTION OF THE WORK. 1-6

1.4 CONSTRUCTION AND INSPECTION 1-6
1.4.1 Governing Specifications 1-6
1.4.2 Permit to Construct 1-6
1.4.3 Connection to Existing Facilities 1-6
1.4.4 Notice 1-6
1.4.5 Other Permits 1-6
1.4.6 Construction Water 1-7
1.4.7 Inspection 1-7
1.4.8 Clean Up 1-8

1.5 CONTROL OF MATERIAL 1-8
1.5.1 Quality of Materials 1-8
1.5.2 Defective Materials 1-8
1.5.3 Storage of Materials 1-8
1.5.4 Handling of Materials 1-8

1.6 USE OF COMPLETED PORTIONS 1-9

1.7 LEGAL RELATIONS AND RESPONSIBILITIES 1-9
1.7.1 Observing Laws and Ordinances 1-9
1.7.2 Permits and Licenses 1-9
1.7.3 Inventions, Patents and Copyrights 1-9
1.7.4 Public Convenience and Safety 1-10
1.7.5 Responsibility of Loss, Damage or Injuries 1-10
1.7.6 Developer's Responsibility for the Work 1-10
1.7.7 Preservation of Property 1-11
1.7.8 Safety 1-11
1.7.9 Personal Liability 1-11
1.7.10 Indemnity 1-12
1.7.11 Warranty of Title 1-12
1.7.12 Termination for Breach 1-13
1.7.13 Notice and Service Thereof 1-13

1.8 INSURANCE REQUIREMENTS 1-14
1.8.1 General 1-14
1.8.2 Worker's Compensation Insurance 1-14
1.8.3 Liability Insurance 1-15

CITY OF TEHACHAPI
SUBDIVISION AND DEVELOPMENT STANDARDS
FEBRUARY 2015

MASTER TABLE OF CONTENTS
(continued)

1.9 IMPROVEMENT SECURITY 1-15
1.9.1 General 1-15
1.9.2 Performance Bond 1-16
1.9.3 Payment Bond 1-16
1.9.4 Guarantee Bond 1-16

1.10 DEVELOPMENT AND BOND RELEASE BY THE CITY 1-17
1.10.1 General Policy 1-17
1.10.2 Final Inspection/Job Walk 1-17
1.10.3 Issuance and Execution of the Project's Punch List 1-17
1.10.4 Record Drawings 1-18
1.10.5 Administrative Review 1-18
1.10.6 Development Acceptance 1-18
1.10.7 Release of Bond Securities 1-18

DIVISION TWO STANDARDS FOR GRADING AND DRAINAGE 2-1

2.1 STANDARDS FOR GRADING AND DRAINAGE 2-1
2.1.1 Purpose and Scope 2-1
2.1.2 Enforcement 2-1
2.1.3 Waiver of Review Process 2-1

2.2 GRADING GENERAL DESIGN POLICY 2-1
2.2.1 Purpose and Scope 2-1
2.2.2 General Policy 2-1
2.2.3 Design Criteria 2-4

2.3 DRAINAGE GENERAL DESIGN POLICY 2-6
2.3.1 Flood Protection 2-6
2.3.2 Flow Onto Adjacent Properties 2-6
2.3.3 Designing for Off-site Storm Water Runoff 2-6
2.3.4 Conformance with Comprehensive Drainage Plans 2-7
2.3.5 Pipe Storm Drains 2-7
2.3.6 Open Channels 2-7
2.3.7 Privately Maintained Drainage Systems 2-7
2.3.8 Design Aids 2-7

2.4 DRAINAGE HYDROLOGIC DESIGN 2-7
2.4.1 General 2-7
2.4.2 Method of Computation of Discharge for Drainage Area 2-8

2.5 DRAINAGE HYDRAULIC DESIGN 2-10
2.5.1 General 2-10
2.5.2 Design Storm Frequency 2-10
2.5.3 Pipe Storm Drains 2-11
2.5.4 Open Channels 2-11

CITY OF TEHACHAPI
SUBDIVISION AND DEVELOPMENT STANDARDS
FEBRUARY 2015

MASTER TABLE OF CONTENTS
(continued)

2.6 DRAINAGE WATERWAY DESIGN 2-12
2.6.1 General 2-12
2.6.2 Pipe 2-12
2.6.3 Cross Gutters 2-14
2.6.4 Box Culverts 2-14
2.6.5 Inverted Siphon 2-15

2.7 DRAINAGE BASIN DESIGN 2-15
2.7.1 Design Criteria 2-15
2.7.2 Access 2-16
2.7.3 Block Wall Requirements 2-16
2.7.4 Right-of-Way 2-17

2.8 DRAINAGE PIPING MATERIAL STANDARDS AND WORKMANSHIP 2-17
2.8.1 General 2-17
2.8.2 Reinforced Concrete Pipe 2-17
2.8.3 Reserved 2-18
2.8.4 Precast Concrete Manholes 2-18

2.9 EARTHWORK CONSTRUCTION 2-18
2.9.1 General 2-18
2.9.2 Earthwork in State and County Rights-of-Way 2-18
2.9.3 Safety Precautions 2-18
2.9.4 Clearing and Grubbing 2-19
2.9.5 Open Excavations and Stockpiling 2-19
2.9.6 Obstructions 2-19
2.9.7 Bracing Excavations 2-19
2.9.8 Correction of Faulty Grades 2-20
2.9.9 Dewatering 2-20
2.9.10 Blasting and Explosives 2-20
2.9.11 Compaction Tests 2-21

2.10 PIPELINE TRENCH EARTHWORK 2-21

2.11 DRAINAGE PIPING CONSTRUCTION 2-21
2.11.1 Connection to Existing Storm Drain Systems 2-21
2.11.2 Material Handling 2-21
2.11.3 Installation of Reinforced Concrete Pipe 2-21
2.11.4 Reserved 2-22
2.11.5 Installation of Precast Concrete Manholes 2-22
2.11.6 Pipeline Testing 2-22
2.11.7 Manhole Testing 2-24
2.11.8 Inspection for Defective or Damaged Pipe in Place 2-25

2.12 ACCEPTANCE 2-26
2.12.1 General 2-26
2.12.2 Cleaning 2-26
2.12.3 Testing 2-26

CITY OF TEHACHAPI
SUBDIVISION AND DEVELOPMENT STANDARDS
FEBRUARY 2015

MASTER TABLE OF CONTENTS
(continued)

2.13 SAMPLE GENERAL AND CONSTRUCTION NOTES. 2-26
2.13.1 General Notes 2-26
2.13.2 Grading Notes 2-27
2.13.3 Drainage Storm Drain Construction Notes 2-29

DIVISION THREE STANDARDS FOR SANITARY SEWERS 3-1

3.1 GENERAL. 3-1
3.1.1 Purpose and Scope 3-1
3.1.2 Enforcement 3-1
3.1.3 Waiver of Review Process 3-1

3.2 DESIGN STANDARDS 3-1
3.2.1 General 3-1
3.2.2 Acceptable Sewer Discharges 3-1
3.2.3 Sanitary Sewer Design Discharge 3-2
3.2.4 Sanitary Sewer Design 3-3
3.2.5 Sanitary Sewer Location, Alignment, Cover and Minimum Size 3-3
3.2.6 Manholes 3-5
3.2.7 Reserved 3-5
3.2.8 Building Sewers (Laterals) and House Connections 3-5
3.2.9 Requirements for Separation of Sewer and Water Lines 3-6

3.3 MATERIAL STANDARDS AND WORKMANSHIP 3-7
3.3.1 General 3-7
3.3.2 Pipe and Conduits 3-8
3.3.3 Polyvinyl Chloride Pipe (PVC) and Fittings 3-8
3.3.4 Vitrified Clay Pipe (VCP) and Fittings 3-10
3.3.5 Precast Concrete Manholes 3-12
3.3.6 Flushing Cleanout 3-15
3.3.7 Building Sewers (Laterals) and House Connections 3-15

3.4 CONSTRUCTION STANDARDS 3-16
3.4.1 Connection to Existing Sewer System 3-16
3.4.2 Material Handling 3-16
3.4.3 Installation of Sewer Pipe and Fittings 3-16
3.4.4 Installation of House Laterals and House Connections 3-18
3.4.5 Test for Damaged or Defective Plastic Sewer Pipe in Place 3-19
3.4.6 Tests for Alignment and Grade, and Damaged or Defective VCP Pipe in Place 3-19
3.4.7 PVC and VCP Pipe Test for Leakage and Infiltration 3-19
3.4.8 Installation of Manhole Frame and Covers 3-21

3.5 ACCEPTANCE 3-22
3.5.1 General 3-22
3.5.2 Cleaning. 3-22
3.5.3 Testing 3-22
3.5.4 Video Survey 3-22

CITY OF TEHACHAPI
SUBDIVISION AND DEVELOPMENT STANDARDS
FEBRUARY 2015

MASTER TABLE OF CONTENTS
(continued)

3.6 PIPELINE AND TRENCHWORK. 3-23
3.6.1 General 3-23
3.6.2 Trench Width 3-23
3.6.3 Limit of Excavation 3-23
3.6.4 Trench Bottom for Pipe 3-23
3.6.5 Trench Backfill 3-24
3.6.6 Selected Material for Pipe Bedding and Pipe Zone 3-24
3.6.7 Imported Pipe Backfill Material 3-24
3.6.8 Pipe Bedding 3-25
3.6.9 Procedure at Pipe Zone. 3-25
3.6.10 Procedure Above Pipe Zone 3-26
3.6.11 Compaction in Open Fields 3-26
3.6.12 Procedure at Street Zone 3-26
3.6.13 Excess Excavation Material. 3-26

3.7 SPECIAL CONSTRUCTION REQUIREMENTS (STEEL CASING) 3-27
3.7.1 General 3-27
3.7.2 Materials 3-27
3.7.3 Casing Seals 3-27
3.7.4 Casing Installation 3-27
3.7.5 Casing Pipeline 3-27
3.7.6 Earthwork and Resurfacing 3-28
3.7.7 Sand Backfilling 3-28

3.8 SAMPLE GENERAL NOTES 3-28
General Notes. 3-28
Sample Standard Sewer Notes 3-29

DIVISION FOUR STANDARDS FOR WATER SYSTEMS 4-1

4.1 STANDARDS FOR WATER SYSTEMS 4-1
4.1.1 General 4-1
4.1.2 Purpose and Scope 4-1
4.1.3 Waiver of Review Process 4-1

4.2 DESIGN STANDARDS 4-1
4.2.1 Non-Fire Water Supply Requirements 4-1
4.2.2 Fire Water Design System Demands and Hydrant Spacing Requirements 4-2
4.2.3 Water System Design 4-3
4.2.4 Water Main Location and Cover 4-4
4.2.5 Gate Valves, Valve Boxes and Vaults 4-5
4.2.6 Water Services 4-6
4.2.7 Air and Vacuum Release Valves 4-6
4.2.8 Flushouts (Blowoffs) 4-7
4.2.9 Fire Protection Requirements (Non-residential Properties) 4-7
4.2.10 Cross-Connection Control Requirements 4-8
4.2.11 Requirements for Water/Sewer Separation 4-9
4.2.12 Storage Facilities 4-10

MASTER TABLE OF CONTENTS
(continued)

4.3 MATERIAL STANDARDS 4-10
4.3.1 General 4-10
4.3.2 Polyvinyl Chloride Pipe (PVC) and Fittings 4-10
4.3.3 Ductile Iron Pipe and Fittings. 4-12
4.3.4 Steel Pipe and Fittings 4-13
4.3.5 Valves 4-15
4.3.6 Plastic Film Wrap 4-16
4.3.7 Water Service Connections 4-17
4.3.8 Fire Hydrant Assembly 4-18
4.3.9 Miscellaneous Hardware 4-19

4.4 CONSTRUCTION STANDARDS 4-19
4.4.1 Connection to Existing Water Line 4-19
4.4.2 Material Handling 4-20
4.4.3 Thrust Devices 4-20
4.4.4 Installation of Water Pipe and Fittings 4-20
4.4.5 Pipeline Testing 4-23

4.5 ACCEPTANCE 4-24
4.5.1 General 4-24
4.5.2 Testing 4-25

4.6 PIPELINE AND TRENCH EARTHWORK 4-25

4.7 SPECIAL CONSTRUCTION REQUIREMENTS (STEEL CASING) 4-25

4.8 SAMPLE GENERAL NOTES 4-25
General Notes. 4-25
Sample Standard Water Notes 4-26

DIVISION FIVE STANDARDS FOR STREETS 5-1

5.1 STANDARDS FOR STREETS 5-1
5.1.1 General 5-1
5.1.2 Purpose and Scope 5-1
5.1.3 Waiver of Review Process 5-1
5.1.4 Enforcement 5-1
5.1.5 State Specifications, California 5-1

5.2 STREETS AND TRAFFIC CIRCULATION - GENERAL POLICY 5-1
5.2.1 Street Improvement Requirements for Developments 5-1
5.2.2 Traffic Impact Studies 5-2
5.2.3 Traffic Impact Fees 5-2
5.2.4 Design of Street Systems 5-3
5.2.5 Major and Minor Arterial Alignment with Developments 5-3
5.2.6 Development Boundary, Widening and Improvement of Existing Streets 5-4
5.2.7 Access Roads 5-4
5.2.8 Access Points 5-4
5.2.9 Fire Department Street Requirements 5-7

CITY OF TEHACHAPI
SUBDIVISION AND DEVELOPMENT STANDARDS
FEBRUARY 2015

MASTER TABLE OF CONTENTS
(continued)

5.3 DESIGN STANDARDS 5-9
- 5.3.1 Street Alignment 5-9
- 5.3.2 Street Widths (ROW) 5-10
- 5.3.3 Street Centerline Radius 5-10
- 5.3.4 Street Intersections 5-10
- 5.3.5 Line of Sight 5-11
- 5.3.6 Cul-de-Sacs and Dead-End Streets 5-13
- 5.3.7 Street Knuckle 5-14
- 5.3.8 Turning Lanes 5-15
- 5.3.9 Road Transition Tapers 5-15
- 5.3.10 Grade Design Criteria 5-15
- 5.3.11 Street Rough Grading 5-17
- 5.3.12 Street Structural Sections 5-17
- 5.3.13 Curb and Gutter 5-18
- 5.3.14 Sidewalks 5-18
- 5.3.15 Drive Approach 5-19
- 5.3.16 Street Lights 5-20
- 5.3.17 Street Name Signs 5-22
- 5.3.18 Regulatory or Warning Signs. 5-22
- 5.3.19 Pavement Striping and Marking 5-22
- 5.3.20 Encased Survey Monuments. 5-23
- 5.3.21 Public Utilities Within or Along Street Right-of-Way (ROW) 5-23
- 5.3.22 Flexible Pavement Design Methodology 5-24

5.4 MATERIAL STANDARDS 5-25
- 5.4.1 Asphalt Concrete 5-25
- 5.4.2 Aggregate Base 5-27
- 5.4.3 Herbicide or Weed Killer 5-27
- 5.4.4 Pavement Striping and Marking 5-27

5.5 CONSTRUCTION STANDARDS 5-27
- 5.5.1 General 5-27
- 5.5.2 Earthwork 5-27
- 5.5.3 Removal of Existing Surfaces. 5-28
- 5.5.4 Resurfacing 5-28
- 5.5.5 Subgrade Compaction 5-29
- 5.5.6 Aggregate Base 5-29
- 5.5.7 Asphaltic Concrete 5-29
- 5.5.8 Fog Seal 5-31
- 5.5.9 Adjusting Existing Highway Facilities 5-31
- 5.5.10 Pavement Markings and Striping 5-31
- 5.5.11 Applying Herbicide or Weed Killer 5-32

5.6 CONCRETE CONSTRUCTION 5-32
- 5.6.1 Concrete Classification 5-32
- 5.6.2 Reinforcing 5-33
- 5.6.3 Concrete Improvements 5-33
- 5.6.4 Miscellaneous Structures 5-33
- 5.6.5 Grout 5-34

CITY OF TEHACHAPI
SUBDIVISION AND DEVELOPMENT STANDARDS
FEBRUARY 2015

MASTER TABLE OF CONTENTS
(continued)

5.7 GENERAL AND CONSTRUCTION NOTES 5-35
General Notes. 5-35
Street Construction Notes 5-36
Traffic Control Notes 5-36

DIVISION SIX STANDARDS FOR LANDSCAPING 6-1

6.1 GENERAL. 6-1
6.1.1 Purpose and Scope 6-1
6.1.2 Enforcement 6-1
6.1.3 Waiver of Review Process 6-1

6.2 DESIGN STANDARDS 6-1
6.2.1 General 6-1
6.2.2 Final Map Requirements 6-2
6.2.3 Walls 6-2
6.2.4 Sidewalks. 6-3
6.2.5 Landscaping 6-3
6.2.6 Irrigation System 6-4

6.3 MATERIAL STANDARDS 6-5
6.3.1 PVC Pipe and Fittings 6-5
6.3.2 Electrical (Low Voltage) 6-5
6.3.3 Water Service Connection 6-6
6.3.4 Backflow Prevention Units 6-6
6.3.5 Automatic Controller 6-6
6.3.6 Remote Control Valves 6-6
6.3.7 Gate Valves 6-7
6.3.8 Small Lawn Sprinkler Heads 6-7
6.3.9 Rotary Sprinkler Heads 6-7
6.3.10 Small Shrubbery Sprinkler Heads 6-8
6.3.11 Quick Coupling Valves 6-8
6.3.12 Valve Boxes 6-8
6.3.13 Installation 6-9

6.4 CONSTRUCTION STANDARDS 6-10
6.4.1 General 6-10
6.4.2 Testing and Adjustment 6-10
6.4.3 Acceptance 6-10
6.4.4 Manuals and Charts 6-11

6.5 GENERAL AND CONSTRUCTION NOTES 6-11
General Notes. 6-11
Sample Standard Landscaping Notes 6-12

CITY OF TEHACHAPI
SUBDIVISION AND DEVELOPMENT STANDARDS
FEBRUARY 2015

MASTER TABLE OF CONTENTS
(continued)

DIVISION SEVEN STANDARDS FOR EROSION AND SEDIMENT CONTROL 7-1

7.1 GENERAL 7-1
7.1.1 Permits 7-1
7.1.2 General Construction Storm Water and Water Discharge Permits 7-1
7.1.3 Notice of Intent 7-1
7.1.4 Submittals 7-1

7.2 REQUIRED DOCUMENTS 7-2
7.2.1 Storm Water Pollution Prevention Plan 7-2
7.2.2 Monitoring Program 7-2
7.2.3 Notice of Intent 7-2
7.2.4 Plans and Material Specifications 7-2

7.3 REQUIRED CONTROLS 7-2
7.3.1 General 7-2
7.3.2 Disturbed Soil Area (DSA) Definition 7-2
7.3.3 Active Areas and Non-active Areas 7-3
7.3.4 Reserved 7-3
7.3.5 Disturbed Soil Area Limitations 7-3
7.3.6 Disturbed Soil Area Control Implementation Guidelines 7-3
7.3.7 Wind Erosion Controls 7-4
7.3.8 BMP Inspections 7-4

7.4 EXECUTION 7-4
7.4.1 General 7-4
7.4.2 Storm Water Pollution Prevention Plan 7-5
7.4.3 Monitoring Program 7-5
7.4.4 Duty to Comply 7-5
7.4.5 Compliance Certification 7-5

DIVISION EIGHT PLAN REVIEW PROCESS 8-1

8.1 PLAN PREPARATION 8-1
8.1.1 Preliminary Investigation and Fees 8-1
8.1.2 Improvement Plan Preparation and Submittal Process 8-1
8.1.3 Development Submittal Requirements 8-3
8.1.4 Variances 8-7
8.1.5 Record Drawings 8-8
8.1.6 Easements 8-8
8.1.7 Plan Approval 8-8
8.1.8 Permit Approval 8-8
8.1.9 Pre-Construction Conference 8-9

8.2 PLAN REVIEW CHECKLISTS 8-9
8.2.1 Grading and Drainage Plans 8-9
8.2.2 Storm Drain Plans 8-10
8.2.3 Sewer Plans 8-11
8.2.4 Water Plans 8-13
8.2.5 Street Plans 8-14

CITY OF TEHACHAPI
SUBDIVISION AND DEVELOPMENT STANDARDS
FEBRUARY 2015

MASTER TABLE OF CONTENTS
(continued)

8.2.6 Landscaping/Wall Construction Plans 8-15

8.3 UNIT PRICES 8-16

ENGINEER'S ESTIMATE FORMS ..... Follow 8-16

DIVISION NINE STANDARDS FOR PARKS DEVELOPMENT 9-1

9.1 INTRODUCTION 9-1
9.1.1 Purpose and Scope 9-1
9.1.2 Enforcement 9-1
9.1.3 Waiver of Review Process 9-1
9.2 LAND DEDICATION/DEVELOPMENT FEES 9-2
9.2.1 Park Land Dedication 9-2
9.2.2 Park Dedication Requirements of Development Fees in Lieu of Dedication 9-2
9.3 PARK DEVELOPMENT DEFINITIONS AND DESIGN POLICIES 9-2
9.3.1 Public Park 9-2
9.3.2 Pocket Park 9-3
9.3.3 Neighborhood Park 9-4
9.3.4 Community Park 9-6
9.3.5 Regional Park 9-8
9.4 PARK DESIGN AND DEVELOPMENT 9-9
9.4.1 Grading and Drainage 9-9
9.4.2 Infrastructure 9-9
9.4.3 Park Walkways 9-9
9.4.4 Stairs and Ramps 9-10
9.4.5 Plazas 9-10
9.4.6 Vehicle Parking 9-10
9.4.7 Bicycle parking 9-11
9.4.8 Landscaping and Irrigation 9-11
9.4.9 Public Shelters 9-12
9.4.10 Restroom Facilities 9-12
9.4.11 Playgrounds 9-13
9.4.12 Park Furnishings 9-14
9.4.13 Baseball and Softball Fields 9-17
9.4.14 Soccer and Football Fields 9-21
9.4.15 Basketball Courts 9-22
9.4.16 Lighting Facilities 9-23

CITY OF TEHACHAPI
SUBDIVISION AND DEVELOPMENT STANDARDS
FEBRUARY 2015

MASTER TABLE OF CONTENTS
(continued)

APPENDIX A TYPICAL DETAILS

DIVISION TWO

2.1 STORM DRAIN JUNCTION MANHOLE DETAIL
2.2 STORM DRAIN CURB OPENING CATCH BASIN DETAIL
2.3 CURB OPENING CATCH BASIN DETAILS
2.4 STORM DRAIN COMBINATION CATCH BASIN DETAIL
2.5 DRAINAGE BASIN AND INLET STRUCTURE
2.6 TYPICAL LOT GRADING PLAN
2.7 TYPICAL LOT GRADING DETAILS
2.8 TYPICAL PLOT PLAN
2.9 RAINFALL INTENSITY-DURATION FREQUENCY (IDF) CHART

DIVISION THREE

3.1 TYPICAL SEWER LATERAL
3.2 TYPICAL HOUSE CONNECTION
3.3 INLINE CLEANOUT
3.4 END OF LINE CLEANOUT
3.5 48” I.D. STANDARD MANHOLE
3.6 60” I.D. STANDARD MANHOLE
3.7 MANHOLE FRAME AND COVER
3.8 MANHOLE – DROP INLET
3.9 STEEL CASING FOR SEWER PIPE

DIVISION FOUR

4.1 WATER AND SEWER PIPE BEDDING AND BACKFILL DETAILS
4.2 1”, 1-1/2” & 2” STANDARD WATER SERVICES
4.3 STANDARD WATER METER
4.4 STANDARD FIRE HYDRANT ASSEMBLY
4.5 BLOWOFF ASSEMBLY
4.6 VALVE BOX ASSEMBLY
4.7 STEEL CASING FOR WATER PIPE
4.8 TYPICAL THRUST BLOCK DETAILS
4.9 COMBINATION AIR RELEASE VALVE ASSEMBLY
4.10 BACKFLOW PREVENTER FOR FIRE LINE PROTECTION
4.11 WATER PROTECTION DEVICE (BACKFLOW PREVENTION) FOR IRRIGATION AND POTABLE SERVICE

DIVISION FIVE

5.1 MAJOR ARTERIAL TYPICAL STREET SECTIONS
5.2 MINOR ARTERIAL TYPICAL STREET SECTIONS
5.3 INDUSTRIAL COLLECTOR TYPICAL STREET SECTION
5.4 LOCAL TYPICAL STREET SECTION
5.5 A.C. OVERLAY AND PATCH DETAILS
5.6 CURB, GUTTER, & SIDEWALK DETAILS
5.6A CURB, GUTTER, & SIDEWALK DETAILS
5.7 RESIDENTIAL DRIVEWAY APPROACH DETAIL

CITY OF TEHACHAPI
SUBDIVISION AND DEVELOPMENT STANDARDS
FEBRUARY 2015

MASTER TABLE OF CONTENTS
(continued)

APPENDIX A TYPICAL DETAILS

5.8 COMMERCIAL DRIVEWAY APPROACH DETAILS
5.9 CROSS GUTTER DETAIL
5.10 ALLEY DRIVEWAY APPROACH
5.11 SURVEY MONUMENT DETAIL
5.12 STANDARD STREET SIGN DETAIL
5.12A STANDARD STREET SIGN DETAIL (DOWNTOWN AREA)
5.13 STANDARD STOP SIGN DETAIL
5.13A STANDARD STOP SIGN DETAIL (DOWNTOWN AREA)
5.14 BARRICADE END OF STREET
5.15 BULB AND CUL-DE-SAC TREATMENT
5.16 OFFSET CUL DE SAC TREATMENT
5.17 STANDARD PARKING STALL DETAILS
5.18 MEDIAN/TURN LANE DETAIL
5.19 HANDICAP RAMP DETAIL
5.20 STREET LIGHT FOR NON-SPEAKER MOUNTED POLES
5.20A STREET LIGHT FOR SPEAKER MOUNTED POLES
5.21 STREET ACCESS SPACING ON MAJOR STREETS
5.22 LINE OF SIGHT REQ'S FOR INTERSECTIONS
5.23 LINE OF SIGHT REQ'S FOR LANDSCAPING
5.24 DISABLED PARKING REQUIREMENTS
5.25 DRIVEWAY ACCESS REQUIREMENTS
5.26 SUBDIVISION TURNAROUND AT FUTURE EXTENSION
5.27 TRASH ENCLOSURE DETAIL

DIVISION SIX

6.1 MATERIAL & PLANT LEGENDS
6.2 PIPING & CONDUIT TRENCHING
6.3 WATER PROTECTION DEVICE (BACKFLOW PREVENTION)
6.4 REMOTE CONTROL VALVES
6.5 QUICK COUPLERS
6.6 IRRIGATION CONTROLS & ENCLOSURE
6.7 POP UP SPRAY HEADS DOUBLE SWING JOINTS
6.8 LANDSCAPED AREAS ON DEDICATED STREETS
6.9 TREE & SHRUB PLANTING DETAILS
6.10 TREE IRRIGATION (BUBBLER SYSTEM)
6.11 MASONRY WALL NON-BEARING
6.12 MASONRY WALL SCREEN/RETAINING
6.13 LANDSCAPING CURB
6.14 WROUGHT IRON WALK GATE MASONRY WALL INSTALLATION

DIVISION SEVEN

7.1 REQUIRED COMBINATION OF TEMPORARY SOIL STABILIZATION & TEMPORARY SEDIMENT CONTROLS & BARRIERS

CITY OF TEHACHAPI
SUBDIVISION AND DEVELOPMENT STANDARDS
FEBRUARY 2015

MASTER TABLE OF CONTENTS
(continued)

APPENDIX B FORMS

1 IMPROVEMENT AGREEMENT ..... 10 PAGES
2 IRREVOCABLE OFFER OF DEDICATION ..... 1 PAGE
3 EASEMENT DEDICATION ..... 1 PAGE
4 GRANT DEED AND DEDICATION ..... 1 PAGE
5 CERTIFICATE OF ACCEPTANCE ..... 1 PAGE
6 NOTICE OF COMPLETION ..... 1 PAGE
7 OWNER'S CERTIFICATE ..... 1 PAGE
8 CERTIFICATE OF COMPLIANCE ..... 1 PAGE
9 ENCROACHMENT PERMIT ..... 5 PAGES
10 APPLICATION FOR CONDITIONAL USE PERMIT ..... 2 PAGES
11 ENVIRONMENTAL INFORMATION FORM ..... 3 PAGES
12 APPLICATION FOR FINAL SUBDIVISION ..... 1 PAGE
13 APPLICATION FOR GENERAL PLAN AMENDMENT ..... 2 PAGES
14 GRADING PERMIT APPLICATION ..... 3 PAGES
15 APPLICATION FOR LOT LINE ADJUSTMENT/PARCEL MAP WAIVER ..... 2 PAGES
16 APPLICATION FOR REZONING ..... 3 PAGES
17 APPLICATION FOR TENTATIVE SUBDIVISION ..... 2 PAGES
18 EXHIBIT "A" FORM OF TENTATIVE SUBDIVISION ..... 2 PAGES
19 APPLICATION FOR TENTATIVE PARCEL MAP ..... 3 PAGES
20 EXHIBIT "A" FORM OF TENTATIVE MAP ..... 2 PAGES
21 APPLICATION FOR TENTATIVE TRACT MAP ..... 3 PAGES
22 EXHIBIT "A" FORM OF TENTATIVE MAP ..... 2 PAGES
23 SIGN PERMIT APPLICATION ..... 1 PAGE

APPENDIX C CHECKLIST

SUBDIVISION AND DEVELOPMENT STANDARDS IMPROVEMENTS INSPECTION CHECKLIST ..... 8 PAGES

DIVISION ONE
GENERAL PROVISIONS

1.1 DEFINITIONS, TERMS AND ABBREVIATIONS

Whenever the following terms and abbreviations occur in these standards, the meaning shall be interpreted as defined in Sections 1.1.1, 1.1.2, and 1.1.3.

1.1.1 Definitions

ACCEPTANCE	That formal action by the City Council accepting the Work.
ACCESS	The safe, adequate, and usable ingress/egress (entrance/exit) to a property or use.
APPLICANT	Any person, governmental agency, or other entity that executes the necessary forms to procure official approval of a Project or a permit to carry out construction of a Project.
BACKFILL	Material used to fill an excavation.
BACKFLOW	A flow of water or other liquids, gases or solids from any source back into the customer's plumbing system or the City's distribution system.
BACKFLOW PREVENTION DEVICE	A device used to maintain fluid flow in a pipe in only one direction.
BENCH	A relatively level step excavated into sloping natural ground on which engineered fill or embankment fill is to be placed.
BORROW FILL	Fill which must be acquired from outside the worksite.
BUILDING PERMIT	Written permission required by the City for the construction, repair, alteration, addition, removal or demolition to a building or structure.
BUILDING SEWER	See Sewer Lateral.
CERTIFICATE OF OCCUPANCY	A document issued by the City Building Official allowing the occupancy or use of a structure or site.
CITY	City of Tehachapi, Kern County, California. Where the word "City" is used in a sense requiring action, such as, approving, inspecting, making a decision, etc., the "CITY MANAGER" shall be understood as the person having the authority to take the required action.
CITY COUNCIL OR COUNCIL	The City Council of the City of Tehachapi.
CITY ENGINEER	The City Engineer for the City of Tehachapi, or a duly authorized representative as appointed by the City from time to time.
CITY MANAGER	The Manager of the City of Tehachapi, his authorized representative, or other such person as may be designated by the City.

CLEARING	The removal of vegetation from a site.
COLLECTOR SEWER	Sewer that receives flow from sewer laterals.
COMMUNITY DEVELOPMENT DIRECTOR	The Community Development Director for the City of Tehachapi, or a duly authorized representative.
COMPACTION	The densification of materials by mechanical means.
CONDUIT	For the purposes of drainage, conduit refers to an underground pipe constructed for the purpose of conveying fluids.
CONTRACT	The Development Agreement executed between a Developer and the City prior to recordation of a Final Map.
CONTRACTOR(S)	The person, firm, or corporation constructing improvements for a Developer. In some instances, the Contractor and Developer may be one in the same.
CUL-DE-SAC	A local street terminating in a vehicular turning area.
CUT	See excavation.
DAYS	When used to designate a period of time, shall be in reference to consecutive calendar days.
DEDICATION	The written designation of land or improvement by a Developer to the City.
DETENTION BASIN	A holding basin designed for the temporary storage of runoff from a storm.
DEVELOPER	The entity identified as such in a Development Agreement.
DEVELOPMENT	A Project which is the subject of a Development Agreement.
DEVELOPMENT AGREEMENT	A written agreement between the City and the Developer regarding a specific Project.
DEVELOPER REIMBURSEMENT AGREEMENT	A written agreement between the City and a Developer, which provides for reimbursement by future developers who benefit from a Project.
DRAINAGE CONVEYANCE SYSTEM	Natural and man-made drainage features that collect, contain, and convey surface water. Natural drainage features include swales, streams, rivers, lakes, and wetlands. Man-made features include gutters, ditches, pipes, and detention/retention facilities.
DRIVEWAY	A private roadway providing access for vehicles to a parking space or parking lot, garage, dwelling, or other structure
EARTH MATERIAL	Any rock and/or natural soil exclusive of any decomposable matter.
EARTHWORK	Excavation, fill and back fill, compaction, and grading.
EASEMENT	Interest in land, usually for a specific purpose, which does not include any rights of possession.
ENCROACHMENT PERMIT	Written authorization by the City allowing a developer to do, or have done, work within the City right-of-way.

EROSION	The wearing away of the ground surface as a result of movement of wind, water, and/or ice.
EXCAVATION	The mechanical removal of soil or rock.
EXISTING GRADE	Elevation before construction.
FILL	Soil or rock used to raise existing grades.
FINISH OR FINAL GRADE	Elevation after construction is completed.
FIRE CHIEF	The Fire Chief for the City of Tehachapi, or a duly authorized representative.
FLOOD OR FLOODING	Partial or complete inundation of normally dry land.
FLOOD HAZARD	Potential damage by water having sufficient depth or velocity to damage improvements or to deposit or scour soil other than within channels or designated waterways
GRADE	Elevation relative to an elevation datum.
GRADING	Modification of existing soil or rock elevations and contours.
GRADING PERMIT	A document approved by the City allowing grading to be performed.
IMPERVIOUS SURFACE	A surface that cannot be penetrated by water.
INFILTRATION	The movement of water into soil.
INSPECTOR	The City Public Works Director or his designated representative employed to inspect construction.
INVERT	The lowest point inside a pipe or culvert.
LABORATORY	A laboratory approved by the City to test materials.
LANDSCAPING	Any of the following or combinations thereof: material such as, but not limited to, grass, ground covers, shrubs, vines, hedges, trees or palms; and non-living durable material commonly used in landscaping, such as, but not limited to, concrete, rocks, pebbles, sand, walls or fences, but excluding paving.
LEGAL ADDRESS OF DEVELOPER	The address of a Developer included in a Development Agreement.
LOT	The smallest platted parcel of real property created by a legal subdivision.
MUNICIPAL IMPROVEMENTS OR IMPROVEMENTS	Any improvement to public, real, or personal property, including but not limited to, installation of streets, roads, pedestrian/bike facilities, streetlights; landscape features; sewer and waterlines; bridge structures; storm drainage facilities; and traffic control devices dedicated to the City when completed.
OBSTRUCTION	Any obstacle to completion of a Development.
PERMITTEE	Any entity that is granted a permit by the City.
PERVIOUS SURFACE	A surface that can be penetrated by water.
PLANNING COMMISSION	The Planning Commission for the City.

PLANS	The drawings and specifications, approved by the City, which show the improvements to be construction for a Development.
PROJECT OR WORK	The improvements to be constructed for a Development.
RETENTION BASIN	A facility used for the storage of runoff.
RIGHT OF WAY	A right to use property for defined purposes granted to a non-owner of the property.
ROAD	Synonymous with street.
ROUGH GRADE	Elevation after initial grading is completed before work is performed to obtain finish (final) grade.
RUNOFF	Water from rainfall, irrigation, or other sources, not absorbed by soil.
SEWER LATERAL	Portion of sewer line extending from sewer main to a building.
SITE	Project location.
SITE PLAN	Drawing showing the layout of improvements for a Project.
SLOPE	An inclined ground surface.
SOIL	Naturally occurring surface deposits overlying bedrock.
SPECIFICATIONS, STANDARDS, OR IMPROVEMENT STANDARDS	The directions, provisions, and requirements approved by the City, pertaining to the method and manner of performing the work shown on the Plans. The Specifications include these Improvement Standards as adopted by the City, and amended from time to time.
STANDARD DETAILS	Drawings adopted by the City as part of these standards.
STATE SPECIFICATIONS	The Standard Specifications, State of California, Department of Transportation, latest edition.
STORM DRAIN	A facility that conveys runoff water.
STORM WATER	The waters derived from rain falling or melting snow.
STORM WATER DETENTION	The temporary storage of storm water runoff.
STORM WATER RETENTION	Storage of runoff until it percolates into the ground or evaporates.
STREET	Includes roads and highways. The terms street, road, and highway are used interchangeably and refer to the rights of way used for vehicular traffic, whether improved or unimproved.
SUBDIVISION	Any division of land governed by the State's Subdivision Map Act and City's Municipal Code, including Tract and Parcel Maps, Parcel Map Waivers, and lot line adjustments.
SUBDIVISION MAP ACT	An act by the State Legislature concerning Division 2, Subdivisions, of the Government Code, State of California which governs the subdivision of land.

SUBDIVISION ORDINANCE	An ordinance of the City Council, City of Tehachapi, Title 17, Subdivisions, of the Tehachapi Municipal Code regulating the subdivision of land within the City.
SUBGRADE	The undisturbed earth or the compacted soil layer immediately below granular sub-base, drainage fill, or topsoil materials.
SURETY	The party or parties who guarantee completion of construction of a Project.
TRUNK SEWER	Sewer that receives flow from collector sewers.
VARIANCE	Permission to design and/or construct something normally forbidden by these standards.
WATERWAY	A natural channel, artificial (man-made) channel, or closed conduit which provides a course for drainage water to flow.
WATER METER	A water measuring device approved by the City.
ZONING ORDINANCE	An ordinance of the City Council, City of Tehachapi Municipal Code, regulating land use within the City.

1.1.2 Terms

1.1.2.1 Whenever in these standards or specifications or upon the plans the words directed, required, permitted, ordered, designated, prescribed or words of like import are used, it shall be understood that the direction, requirements, permission, order, designation, or prescription of the City Manager is intended and similarly the words approved, acceptable, satisfactory, or words of like import, shall mean approved by, or acceptable to, or satisfactory to the City Manager, unless otherwise expressly stated.

1.1.2.2 If the Developer and the Contractor are not one in the same, it will be the responsibility of the Developer to see that all provisions of these standards are met either by the Developer himself or by his Contractor.

1.1.3 Abbreviations

ADA	Americans with Disability Act
ACI	American Concrete Institute
ANSI	American National Standards Institute (formerly USASI, USAS, ASA)
APWA	American Public Works Association
ASTM	American Society for Testing and Materials
AWWA	American Water Works Association
CALTRANS	California State Department of Transportation
FEMA	Federal Emergency Management Agency.
SDR	Standard Dimension Ratio
OSHA	Occupational Safety and Health Administration

1.2 APPLICABILITY

If, in the opinion of the City, circumstances require the design and construction of any municipal improvements not adequately covered by these standards, the City may set different design criteria, require use of other materials, and/or special construction techniques.

1.3 DESCRIPTION OF THE WORK

1.3.1 The Developer shall furnish all transportation, materials, equipment, labor and supplies to complete the construction of municipal improvements in conformance with the approved Plans.

1.3.2 The type and scope of municipal improvements required to be constructed by the Developer shall be as specified in these Improvement Standards, the Subdivision Ordinance and Subdivision Map Act, and in any conditions of approval governing a specific development.

1.4 CONSTRUCTION AND INSPECTION

1.4.1 Governing Specifications

All construction shall be in accordance with these Standards and the Subdivision Ordinance. The Subdivision Ordinance is hereby made a part of these Improvement Standards by reference as though set forth in full in this document.

1.4.2 Permit to Construct

The Developer shall not commence construction on a Project until after approval by the City of the Plans, bond and insurance forms, grant of easement(s), if any, execution of the Developer Agreement, and payment of Plan Check, Inspection Fees, and other applicable fees.

1.4.3 Connection to Existing City Facilities

No connection shall be made to existing City owner water, sewer, or storm drain facilities without prior approval and inspection by the Public Works Director.

1.4.4 Notice

Notice shall be given to the City at least seven working days in advance of commencement of work. Prior to any excavation, the Developer, or his Contractor, shall notify Underground Service Alert at 1-800-642-2444.

1.4.5 Other Permits

1.4.5.1 The Developer and Contractor shall secure a City of Tehachapi business license prior to beginning any work within City limits. The license can be obtained at City Hall.

1.4.5.2 The Developer shall secure all encroachment permits and all licenses, pay all charges and fees, and give all notices as necessary and required for the work by other agencies having jurisdiction. These shall be filed with the City at least two weeks prior to commencement of work.

1.4.6 Construction Water

The Developer shall purchase construction water from the Tehachapi-Cummings County Water District (TCCWD).

1.4.7 Inspection

1.4.7.1 All Work shall be subject to inspection by the City and shall be left open and uncovered until the installation is approved by the City Engineer or his representative. A minimum of one business day notice shall be given to the City by the Developer for inspection requests.

1.4.7.2 The City shall at all times have access to the Work during construction and shall be furnished with every reasonable facility for ascertaining full knowledge respecting the progress, workmanship and character of materials used and employed in the Work.

1.4.7.3 No pipe, fittings or other materials shall be backfilled until inspected and approved by the City.

1.4.7.4 Inspection of the work by the City shall not relieve the Developer of his obligation to complete the Work as prescribed by the Plans approved by the City. Defective work shall be made good, and unsuitable materials may be rejected notwithstanding the fact that such defective work and unsuitable materials have been previously overlooked by the City and accepted. The installation and inspection of unsuitable materials shall not be construed as acceptable and modification to these specifications shall only be made by the City in writing.

1.4.7.5 The City shall have the authority to suspend the Work wholly or in part for such time as it may deem necessary due to the failure on the part of the Developer to carry out orders given or to perform any provisions of the Plans. The Developer shall immediately comply with the order of the City to suspend the Work wholly or in part. The Work shall be resumed when methods or defective work are corrected as ordered by the City. Failure to comply with requests of the City may prevent Acceptance of the Project.

1.4.7.6 All construction shall be done in compliance with the standards as established by the Occupational Health and Safety Act (OSHA) and appropriate State of California regulations.

1.4.7.7 The Developer shall bear all costs for construction inspection. The Developer shall also bear the cost of traffic regulations lawfully exacted by the Federal Government, the State of California, County of Kern, or City of Tehachapi or during the time of performing work affecting the property of said Government, State, County, or City.

1.4.7.8 The Developer shall request inspection for all work items as outlined in the City of Tehachapi Subdivision and Development Standards Improvements Inspection Checklists in Appendix C.

1.4.8 Clean Up

1.4.8.1 During the progress of the Work, the premises shall be kept free of any unsightly accumulation of rubbish and debris. Upon completion of the Work and before final acceptance of the completed facility by the City, all unused materials, rubbish, concrete forms, surplus excavated material and other materials or equipment shall be removed from the work area.

1.4.8.2 If during the progress of the Work any improvements such as fences, lawns, shrubs or other vegetation, whether on private or public property are damaged, they shall be restored to a condition equivalent to that which existed at the time construction operations were started. These repairs shall be completed prior to acceptance of the completed facilities by the City.

1.5 CONTROL OF MATERIAL

1.5.1 Quality of Materials

All equipment, materials and supplies to be incorporated in the Work shall be new unless otherwise specified and shall conform to the requirements stated in the Plans.

1.5.2 Defective Materials

All materials not conforming to the requirements of the Plans shall be considered as defective and all such materials, whether in place or not, shall be rejected and shall be removed immediately from the site of the Work unless otherwise permitted by the City. No rejected materials, the defects of which have been subsequently corrected, shall be used until approved in writing by the City.

1.5.3 Storage of Materials

All materials for use in the Work shall be stored in such a manner as to prevent damage from exposure to the elements, admixture of foreign materials or from any other cause. The Developer shall be fully responsible for any damage incurred to the materials for the Work while being stored, including damage resulting from storing of material in public right-of-way and acquired easements.

1.5.4 Handling of Materials

The Contractor shall protect the pipe and other materials during handling against impact shocks and free fall. Contact of hooks with premolded joint surfaces will not be permitted. Pipe having premolded joint rings or attached couplings shall be handled so that no weight, including the pipe itself, will bear on or be supported by the jointing material. Spigot rings damaged in any way, no matter how minor, shall be replaced.

1.6 USE OF COMPLETED PORTIONS

When the work or any portion of it is sufficiently complete to be utilized or placed into service, the City shall have the right upon written notification to the Developer to utilize such portions of the Work and to place the operable portions into service.

Upon said notice and commencement of utilization or operation by the City, the Developer shall be relieved of the duty of maintaining the portions so utilized or placed into operation; provided, however, that nothing in this article shall be construed as relieving the Developer of the full responsibility for completing the work in its entirety, for making good defective work and materials, for protecting the work from damage, and for being responsible for damage and such action shall not relieve the Developer, his Surety, or insurers of the provisions of SECTION 1.8 "INSURANCE REQUIREMENTS" and Sec. 1.7.10 "INDEMNITY", in these General Provisions.

1.7 LEGAL RELATIONS AND RESPONSIBILITIES

1.7.1 Observing Laws and Ordinances

The Developer shall at all times observe and comply with and shall cause his Contractor, agents, employees, subcontractors and suppliers to observe and comply with all such existing and future laws, ordinances, regulations, orders and decrees and shall hold harmless, indemnify and defend the City, the City Engineer, and each of the foregoing directors, officers, employees and agents against any claim or liability arising from or based on the violation of any such law, ordinance, regulation, order or decree by the Developer or Contractor, his employees, agents, subcontractors, or suppliers.

1.7.2 Permits and Licenses

The Developer shall procure all permits and licenses, pay all charges and fees, and give all notices necessary and incidental to the due and lawful prosecution of the Work.

1.7.3 Inventions, Patents, and Copyrights

1.7.3.1 The Developer shall pay all royalties and assume all costs arising from the use of any invention, design, process, material, equipment, product or device which is the subject of patent rights or copyrights.

1.7.3.2 The Developer shall hold harmless, indemnify and defend the City, the City Engineer, and their consultants, all other City consultants and each of the foregoing directors, officers, employees and agents from and against all claims, damages, losses, expenses and other costs, including costs of defense and attorney's fees, arising out of any infringement of patent rights or copyrights incident to the use in the performance of the Work or resulting from the incorporation in the Work of any invention, design, process, material, equipment, product or device and shall defend all such claims in connection with any alleged infringement of such rights.

1.7.4 Public Convenience and Safety

1.7.4.1 The Developer shall so conduct his operations as to offer the least possible obstruction and inconvenience to the public.

1.7.4.2 Convenient access to driveways, houses and buildings along the line of work shall be maintained and temporary crossings shall be provided and maintained in good condition. Not more than one crossing or intersecting street or road shall be closed at any one time, and then only with written City permission.

1.7.4.3 The Developer shall provide and maintain such fences, barriers, directional signs, lights and flagmen as are necessary to give adequate warning to the public at all times of any dangerous conditions to be encountered as a result of the construction work and to give directions to the public.

1.7.5 Responsibility for Loss, Damage or Injuries

The Developer shall be responsible for all claims, demands or liability from any cause arising out of or resulting from or in connection with the performance of the Work, excepting only those as may be caused solely and exclusively by the fault or negligence of the City, the City Engineer, or their consultants, all other City consultants and each of the foregoing directors, officers, employees and agents. Such responsibility shall extend to claims, demands, or liability for loss, damage or injuries occurring after completion of the work as well as during the progress of the Work.

1.7.6 Developer's Responsibility for the Work

1.7.6.1 Until Acceptance of the Work, the Developer shall have the responsible charge and care of the Work and of the materials to be used therein (including materials which have been furnished by the City) and shall bear the risk of injury, loss or damage to any part thereof by the action of the elements or from any other cause, whether arising from the execution or from the non-execution of the Work.

1.7.6.2 The Developer shall rebuild, repair, restore and make good all injuries, losses or damages to any portion of the Work or the materials occasioned by any cause before its completion and acceptance and shall bear the expense thereof. Where necessary to protect the Work or materials from damage, the Developer shall at his expense provide suitable drainage and erect such temporary structures as are necessary to protect the Work or materials from damage. The suspension of the Work or the granting of an extension of time for any cause whatever shall not relieve the Developer of his responsibility for the Work and materials as herein specified.

1.7.7 Preservation of Property

1.7.7.1 The Developer shall exercise due care to avoid injury to existing improvements or facilities, utility facilities, adjacent property, and trees and shrubbery that are not to be removed.

1.7.7.2 All trees, shrubbery and landscaping that are not to be removed, and pole lines, fences, signs, survey markers and monuments, buildings and structures, conduits, pipelines under or above ground, sewer and waterlines, all highway or street facilities, and any other improvements or facilities within or adjacent to the work shall be protected from injury or damage, and the Developer shall provide and install suitable safeguards to protect such objects from injury or damage. If such objects are injured or damaged by reason of the Developer's operation, they shall be replaced or restored at the Developer's expense to a condition as good as when the Developer entered upon the work or as good as required by the plans and specifications if any such objects are a part of the work being performed.

1.7.7.3 In addition to any requirements imposed by law, the Developer shall shore up, brace, underpin and protect as may be necessary, all foundations and other parts of all existing structures adjacent to and adjoining the site of the Work which are in any way affected by the excavations or other operations connected with the performance of the Work. Whenever any notice is required to be given by the Developer to any adjacent or adjoining land owner or other party, such notice shall be given by the Developer and shall be given at least 2 business days prior to commencement of any work.

1.7.8 Safety

1.7.8.1 The Developer shall be solely and completely responsible for conditions of the jobsite, including safety of all persons and property during performance of the Work, and the Developer shall fully comply with all state, federal and other laws, rules, regulations and orders relating to safety of the public and workers.

1.7.8.2 The right of the City to conduct construction review or observation of the Work will not include review or observation of the adequacy of the Developer's safety measures in, on or near the construction site.

1.7.9 Personal Liability

Neither the City, the City Engineer, their consultants, all other City consultants, nor any of the foregoing directors, officers, employees, or agents shall be personally responsible for any liability arising under or by virtue of the Contract.

1.7.10 Indemnity

1.7.10.1 To the fullest extent permitted by law, the Developer shall indemnify and hold harmless the City, the City Engineer, their consultants, all other City consultants and each of the foregoing directors, officers, agents and employees from and against all claims, damages, losses, expenses and other costs, including costs of defense and attorney's fees, arising out of or resulting from or in connection with the performance of the Work, both on and off the jobsite, provided that any of the foregoing (1) is attributable to personal injury, bodily injury, sickness, disease or death, or to injury to or destruction of tangible property (other than the Work itself), including the loss of use resulting therefrom and (2) is caused in whole or in part by any act or omission of the Developer, the Contractor, any subcontractor, any supplier, anyone directly or indirectly employed by any of them or anyone for whose acts or omissions any of them may be liable, regardless of whether or not it is caused in part by any act or omission (active, passive or comparative negligence included) of a party indemnified hereunder.

1.7.10.2 In any and all claims against the indemnified parties by any employee of the Developer, the Contractor, any subcontractor, any supplier, anyone directly or indirectly employed by any of them or anyone for whose acts any of them may be liable, the indemnification obligation under the first and fourth paragraphs in this section on INDEMNITY shall not be limited in any way by any limitation on the amount or type of damage, compensation, or benefits payable by or for the Developer, the Contractor, or any subcontractor, or any supplier or other person under workers' compensation acts, disability benefit acts or other employee acts.

1.7.10.3 The obligations of the Developer under the first and fourth paragraphs in this section on INDEMNITY shall not extend to the liability of the City Engineer, their consultants, all other City consultants and each of the foregoing directors, officers, employees and agents, arising out of or resulting from or in connection with the preparation or approval of maps, drawings, opinions, reports, surveys, designs or specifications, providing that the foregoing was the sole and exclusive cause of the loss, damage or injury.

1.7.10.4 The Developer shall also indemnify and hold harmless the City, the City Engineer, their consultants, all other City consultants and each of the foregoing officers, employees and agents from and against all losses, expenses, damages (including damages to the Work itself), attorney's fees and other costs, including all costs of defense, which any of them may incur with respect to the failure, neglect, or refusal of Developer to faithfully perform the Work and all of the Developer's obligations under the Contract. Such costs, expenses and damages shall include any cost, including attorney's fees, incurred by the indemnified parties in any lawsuit to which they are a party.

1.7.11 Warranty of Title

No materials, supplies, or equipment for the Work under the Contract shall be purchased subject to any chattel mortgage or under a conditional sales contract or other agreement by which an interest therein or any part thereof is retained by the seller or supplier. The Developer warrants clear and good title to all materials, supplies and equipment installed and incorporated in the Work and agrees upon completion of all Work to deliver the premises together with all improvements and appurtenances constructed or placed thereon by him to the City free from any

claims, liens, encumbrances or charges and further agrees that neither he nor any person, firm or corporation furnishing any material or labor for any work covered by the Contract shall have any right to a lien upon the premises or any improvement or appurtenances thereon, provided that this shall not preclude the Developer from installing metering devices or other equipment of utility companies or of municipalities, the title of which is commonly retained by the utility company or the municipality. Nothing contained in this article, however, shall defeat or impair the right of such persons furnishing materials or labor under any bond given by the Developer for their protection, or any right under any law permitting such persons to look to funds due the Developer in the hands of the City. The provisions of this article shall be inserted in all subcontracts and material contracts, and notices of its provision shall be given to all persons furnishing materials for the Work when no formal contract is entered into for such materials.

1.7.12 Termination for Breach

1.7.12.1 If the Developer refuses or fails to prosecute the Work or any separable part thereof with such diligence as will insure its completion within the time specified in the Contract or any extension thereof, or fails to complete such work within such time, or if the Developer should be adjudged a bankruptcy, or if the Developer should make a general assignment for the benefit of the Developer's creditors, or if a receiver should be appointed on account of the Developer's insolvency, or if the Developer, his Contractor, or any subcontractors should violate any of the provisions of the Contract, the City may serve written notice upon the Developer and his Surety of its intention to terminate the Contract, said notice to contain the reasons for such intention to terminate, and unless within ten (10) days after the service of such notice such violations shall cease and satisfactory arrangements for the corrections thereof be made, the Contract shall, upon the expiration of said ten (10) days, cease and terminate.

1.7.12.2 In the event of any such termination, the City shall immediately serve written notice thereof upon the Surety, and the Developer. The Surety shall have the right to take over and perform the Contract. If the Surety within fifteen (15) days after the serving upon it of a notice of termination does not give the City written notice of its intention to take over and perform the Contract, or does not commence performance thereof within thirty (30) days from the date of serving said notice, the City may take over the Work and prosecute the same to completion by contract or by any other method it may deem advisable for the account and at the expense of the Developer. Surety shall be liable to the City for any excess cost or other damage occasioned the City hereby, and in such event the City may, without liability for so doing, take possession of and utilize in completing the Work such materials, appliances, plants and other property belonging to the Developer that may be on the site of the Work and be necessary therefor.

1.7.12.3 The foregoing provisions are in addition to and not in limitation of any other rights or remedies available to the City.

1.7.13 Notice and Service Thereof

1.7.13.1 Any notice required or given under the Contract shall be in writing, be dated and signed by the party giving such notice or his duly authorized representative, and be served as follows:

1.7.13.2 If to the City, by personal delivery or by deposit in the United States mail.

1.7.13.3 If to the Developer, by personal delivery to the Developer or to his authorized representative or by deposit in the United States mail.

1.7.13.4 If to the Surety or any other person, by personal delivery to said Surety or other person or by deposit in the United States mail.

1.7.13.5 All certified notices shall be in sealed envelopes, shall be sent by certified mail with postage prepaid and shall be addressed to the addresses in the Contract documents or such substitute addresses which a party designates in writing.

1.8 INSURANCE REQUIREMENTS

1.8.1 General

1.8.1.1 Construction shall not commence, or continue, until or unless there is in full force and affect all required insurance. The Developer shall not permit any work to be done unless and until the Worker's Compensation Insurance and Liability Insurance requirements have been complied with.

1.8.1.2 The types of insurance the Developer's Contractor shall obtain and maintain are Worker's Compensation Insurance and Liability Insurance, all as set forth herein.

1.8.1.3 Worker's Compensation Insurance and Liability Insurance shall be maintained in full force and effect for the full warranty period of one year from the date of Acceptance of the Work.

1.8.1.4 Insurers must be authorized to do business and have an agent for service of process in California and have an "A" policyholder's rating and a financial rating of at least Class XI in accordance with the most current Best's Rating.

1.8.1.5 As evidence of specified insurance coverage, the Developer shall provide certificates of insurance and endorsements to the City on the forms provided as a part of these Improvement Standards. No alteration or substitution of said forms will be allowed.

1.8.1.6 The Worker's Compensation Insurance shall provide bodily injury coverage by Accident of not less than $1,000,000 for each employee and $1,000,000 for each accident. Bodily injury coverage by disease shall be for not less than $1,000,000 for each employee and $1,000,000 for each aggregate disease.

1.8.1.7 The Liability Insurance shall provide bodily injury coverage of not less than $2,000,000 for one person and not less than $2,000,000 for one occurrence. Property damage coverage shall be for not less than $2,000,000..

1.8.2 Worker’s Compensation Insurance

The Developer shall provide a certificate(s) of insurance to the City certifying that his Contractor has obtained for the period of the Contract full Worker's Compensation Insurance coverage for all

persons whom the Contractor employs or may employ in carrying out the Work. This insurance shall be in strict accordance with the requirements of the most current and applicable state Worker's Compensation Insurance laws.

1.8.3 Liability Insurance

1.8.3.1 The Developer shall provide a certificate(s) of insurance to the City showing his Contractor has the Liability Insurance coverage stated above.

1.8.3.2 Included in such insurance shall be contractual coverage sufficiently broad to insure the matters set forth in Sec. 1.7.10, "INDEMNITY," of these General Provisions, except those matters set forth in the fourth paragraph thereof.

1.8.3.3 Included in such insurance shall be a "Cross Liability" or "Severability of Interest" clause. The Liability Insurance coverage shall include each of the following types of insurance:

a. General Liability

b. Comprehensive Form
   1) Premises-Operations
   2) Explosion and Collapse Hazard
   3) Underground Hazard
   4) Products/Completed Operations Hazard
   5) Contractual Insurance
   6) Broad Form Property Damage Including Completed Operations
   7) Independent Contractors
   8) Personal Injury

c. Automobile Liability
   1) Comprehensive Form Including Loading and Unloading
   2) Owned
   3) Hired
   4) Non-Owned

1.8.3.4 The Liability Insurance shall include as additional insureds: the City, the City Engineer, their consultants, all other City consultants and each of the foregoing directors, officers, agents and employees. The insurance afforded to these additional insureds shall be primary insurance. If the additional insureds have other insurance which might be applicable to any loss, the amount of the insurance provided under this section on LIABILITY INSURANCE shall not be reduced or prorated by the existence of such other insurance.

1.9 IMPROVEMENT SECURITY

1.9.1 General

1.9.1.1 Improvement security shall be required as specified in the Subdivision Ordinance and Subdivision Map Act. If the Developer provides bonds as a means of security, they shall meet the requirements of this section, and applicable sections of the Subdivision

Ordinance and Subdivision Map Act. Other security, as provided in the Subdivision Ordinance, shall be furnished by the Developer to cover the performance of the contract, payment of all labor and materials associated with the improvements, and guarantee of the Work, all as described herein.

1.9.1.2 Performance and Payment Bonds and Guarantee Bond shall be secured from a surety company, or companies, satisfactory to the City and whose name is on file with the County Clerk of Kern County as an approved and financially sound surety company, authorized to transact business in this state. The bond forms to be used are provided as part of these Improvement Standards and no alteration or substitution of said forms shall be allowed.

1.9.1.3 The bonds shall meet all of the requirements and contain all of the conditions required by Division 6 of the Government Code of the State of California.

1.9.1.4 A Guarantee bond shall be furnished to the City and shall warrant all work performed to be free from defects in material and/or workmanship for a period of one year from the date of Acceptance by the City.

1.9.1.5 Improvement security shall be accepted by the City prior to start of construction.

1.9.1.6 The Developer shall submit copies of proposals received from Contractors bidding on constructing the improvements or an Engineer's estimate of the cost to construct the improvements to the City to establish the Project construction costs for purposes of improvement security.

1.9.2 Performance Bond

The Developer shall furnish a surety bond, or satisfactory substitute as provided above, in the amount of one hundred percent (100%) of the Project construction cost to the benefit of the City, as security for the faithful performance of the Work in compliance with the Subdivision Ordinance and the Plans and Specifications.

1.9.3 Payment Bond

The Developer shall furnish a separate bond or satisfactory substitute as provided above, in an amount of fifty percent (50%) of the Project construction cost to the benefit of the City, as security for the payment of all persons performing labor and furnishing materials in connection with the Work.

1.9.4 Guarantee Bond

The Developer shall furnish to the benefit of the City, a Guarantee Bond or satisfactory substitute as provided above, guaranteeing the Work will be free from defects as a result of faulty workmanship and materials for a period of one year from the date of Acceptance by the City. The

amount of any such Guarantee Security will be determined by the City but shall not be less than ten percent (10%) of the Project construction cost. Guarantee security shall be required from the Developer regardless whether or not any other type of security is required by the City.

1.10 DEVELOPMENT ACCEPTANCE AND BOND RELEASE BY THE CITY

1.10.1 General Policy

1.10.1.1 This section of the standards is intended to provide general guidelines and procedures for the acceptance of public improvements and the release of the Developer's bonds by the City.

1.10.1.2 No development whether residential, commercial, or industrial will be partially accepted unless the development is phased during the subdivision of land process in which case development acceptance will be for each individual phase as outlined in the Development's final map.

1.10.1.3 It shall be the responsibility of the Developer/Owner to provide the City with the required written notices /requests as outlined in the following sections.

1.10.2 Final Inspection / Job Walk

1.10.2.1 Upon substantial completion of the municipal improvements as required for each development (grading, drainage, storm drain, potable water, reclaimed water, sewer, street, wall, landscape, etc.), the Developer shall request to the office of the City Engineer in writing a final inspection and job walk of the development.

1.10.2.2 The City will schedule the final inspection and job walk within a period of five (5) calendar days from the date of receipt of the Developer's request.

1.10.3 Issuance and Execution of the Project's Punch List

1.10.3.1 During the final inspection and job walk, the City's onsite representative will take notes of those items needing additional work. These notes will be compiled into the developments project punch list and will be mailed to the Developer within five (5) calendar days from the date of the final inspection.

1.10.3.2 The Developer shall address all noted issues listed in the compiled punch list.

1.10.3.3 Upon completion of the punch list items, the Developer shall provide notification in writing to the City, stating that the punch list items have been addressed and requesting a final inspection of the punch list items.

1.10.3.4 The City will schedule the final inspection of the punch list items within a period of five (5) calendar days from the date of receipt of the Developer's request.

1.10.3.5 If the City's onsite representative is not satisfied with the work performed, he will note the items needing additional work in the field and will request that he be given a 48-hr inspection notice for inspection and acceptance of the improvements. This sequence shall continue until the City's onsite representative is satisfied with the improvements.

1.10.4 Record Drawings

1.10.4.1 No development will be accepted prior to receipt and review of the Record Drawings for each element of the work in their records.

1.10.4.2 Refer to Section 8.1.4 for additional requirements.

1.10.5 Administrative Review

1.10.5.1 Prior to acceptance of any development, the City will perform an administrative review to verify that all project paperwork has been properly filed with the City, that all fees have been paid and accounted for, and that all easement documents, grant deeds, etc. have been properly filed and recorded.

1.10.5.2 If the City finds any need for additional information, the City will provide a written notice to the Developer requesting that said additional information be provided.

1.10.5.3 No development will be accepted until the City is satisfied that all administrative issues have been resolved.

1.10.6 Development Acceptance

1.10.6.1 Once the Developer has complied with all the requirements of the preceding sections, he/she shall submit in writing a request that the development be accepted by the City.

1.10.6.2 Upon confirmation of compliance of the development's conditions of approval and items in this section, the City Manager will accept, in writing, from the Developer the completed facilities.

1.10.7 Release of Bond Securities

1.10.7.1 General

a. In general bonds will not be released to the Developer until the active performance time period as outlined in the following sections expire.

b. The Developer shall be responsible to request in writing at time of bond expiration that said bonds be released by the City.

1.10.7.2 Performance Bond

a. This obligation of the performance bond shall remain in full force and effect for a period of 40 days from the date of Final Acceptance by the City of the improvements described in the Contract between the Owner and the City.

1.10.7.3 Payment Bond

a. This obligation of the payment bond shall remain in full force and effect for a period of 40 days from the date of Final Acceptance by the City of the improvements described in the Contract between the Owner and the City.

1.10.7.4 Guarantee Bond

a. This obligation of the guarantee bond shall remain in full force and effect for a period of one year from the date of Final Acceptance by the City of the improvements described in the Contract between the Owner and the City.

PAGE LEFT BLANK INTENTIONALLY.

DIVISION TWO
STANDARDS FOR GRADING AND DRAINAGE

2.1 STANDARDS FOR GRADING AND DRAINAGE

2.1.1 Purpose and Scope

Division Two pertains to the design and construction requirements for controlling runoff (drainage) and grading.

2.1.2 Enforcement

Provisions of these standards for grading and drainage shall be enforced by the City Engineer, the City Building Official, and their duly authorized representatives.

2.1.3 Waiver of Review Process

There are no provisions for the waiver of the review process for drainage improvement plans or grading plans.

2.2 GRADING GENERAL DESIGN POLICY

2.2.1 Purpose and Scope

This section establishes the minimum acceptable standards for the design of grading operations within new developments in the City of Tehachapi.

2.2.2 General Policy

2.2.2.1 All grading design and operations shall conform to the latest edition of the following standards and regulations;

a. California Building Code, Chapter 18 and Appendix J, latest edition (including any local amendments), in regards to site development, building construction, foundation requirements, slopes, and similar usage.

b. All applicable “Grading” sections of the California Department of Transportation Standard Specifications, in regards to street construction or similar usage. For more information, refer to Division Five, “Standards for Streets and Traffic Circulation” of these standards.

c. These engineering standards.

2.2.2.2 When a discrepancy occurs between the above referenced standards these engineering standards shall govern, unless decided otherwise by the City Engineer.

2.2.2.3 Engineered Grading:

a. All grading operations requiring greater than 5,000 cubic yards of earthwork, or grading operations involving special conditions or hazards, as determined by the City Engineer, shall be designated as “Engineered Grading”

b. The City Building Official may require a development to be designated “Engineered Grading”.

c. Projects involving “Engineered Grading” shall submit to the City Engineer the following:

1) Grading Plan showing the work to be performed, project extent, notes, details, references to applicable codes, references to soils reports and the recommendations contained therein, existing grades, proposed grades, and other pertinent information.

2) A “Soils Engineering Report” performed by a registered civil engineer specializing in geotechnical engineering.

3) An “Engineering Geology Report” that provides adequate description of the geology of the site and any recommendations regarding the effect of the geological conditions on the proposed development.

d. Prior to construction, applicant shall pay fees and receive a grading permit in accordance with Section 2.2.2.5.

e. Grading plans shall designate all borrow or fill areas for any import or export expected during grading activities.

2.2.2.4 Regular Grading:

a. All grading operations that are not designated as “Engineered Grading” shall be designated as “Regular Grading”.

b. Projects involving “Regular Grading” shall submit to the City Engineer the following:

1) Grading Plan showing the work to be performed, project extent, notes, details, references to applicable codes, references to soils reports and the recommendations contained therein, existing grades, proposed grades, and other pertinent information.

2) A “Soils Engineering Report” performed by a registered civil engineer specializing in geotechnical engineering.

c. Prior to construction, applicant shall pay fees and receive a grading permit in accordance with Section 2.2.2.5.

2.2.2.5 Permits:

a. No person shall do any grading or demolition within a public right-of-way without first having an approved grading plan and an encroachment permit from the City.

b. No person shall commence grading operations within private property without first having an approved grading plan and permit from the City.

c. Grading plan review and permit fees shall be paid in accordance with the City’s adopted fee schedule at the time the permit is requested.

2.2.2.6 Erosion control

a. All slopes in excess of three feet shall be prepared and maintained to control against erosion. This control may consist of effective planting.

b. Erosion control measures for slopes within public rights-of-way shall be as approved by the Community Development Director and the City Engineer.

c. Erosion control for slopes on private property shall be in place prior to the issuance of an occupancy permit.

2.2.2.7 Completion of Work:

a. The following shall be required for projects involving “Engineered Grading”.

b. Prior to the issuance of a building permit, the developer shall submit the following certifications:

1) Design Engineer shall certify that project was rough graded in substantial conformance with Chapter 18 and appendix J of the California Building Code including any local amendments and the final approved grading plan.

2) Soils Engineer shall certify that, to the best of his knowledge, the project was rough graded in substantial conformance with Chapter 18 and appendix J of the California Building Code including any local amendments and the approved soils engineering report. In addition a report shall be submitted to the City showing locations and elevations of field density tests, summaries of field and laboratory tests, other

substantiating data, and comments on any changes made during the grading and their effect on the recommendations made in the approved engineering investigative report or the approved grading plan.

c. Prior to the final approval of the development, issuance of an occupancy permit, or acceptance by the City, the developer shall submit the following certifications:

1) Design Engineer shall certify that project was completed in accordance with Chapter 18 and appendix J of the California Building Code including any local amendments and the final approved grading plan. In addition, Design Engineer shall prepare and submit to the City as built grading plan showing original ground elevations, as-graded ground service elevations, lot drainage patterns, and the locations and elevations of surface and subsurface drainage facilities.

2) Grading Contractor shall certify that the project was completed in accordance with Chapter 18 and appendix J of the California Building Code including any local amendments and the as built grading plan.

2.2.3 Design Criteria

2.2.3.1 Cut / Fill Slopes:

a. All cut and fill slopes supporting structures shall be no steeper than 1 vertical in 2 horizontal. All other slopes shall conform to the same restriction unless the Developer furnishes a soils engineering report stating that the site has been investigated and giving an opinion that a steeper slope will be stable and not create a hazard to public or private property.

b. All cut and fill slopes for public roads shall be contained within public rights-of-way, unless slope easements are given to the City as directed by the City Engineer.

c. Cut and fill slopes occurring on adjacent property to the development shall not be allowed without the express written consent of the adjacent property Owner, subject to the approval of the City Engineer.

d. Cuts over eight (8) feet in depth may require slope stability analysis in accordance with Section 2.7.1.7 of these engineering design standards.

2.2.3.2 Grading Setbacks:

a. The top of slopes, within residential subdivisions, shall occur two (2) feet beyond the higher of the two lots property line (see the City standard detail 2.7). Slope from the higher grade to the lower grade shall be as stated in Section 2.2.3.1.

b. At the site boundary line, the top of slopes shall occur two (2) feet beyond the

higher of the two grades. Slope from the higher grade to the lower grade shall be as stated in Section 2.2.3.1.

c. Grading shall also meet the setback requirements as discussed in the California Building Code, latest edition.

2.2.3.3 Building Pads:

a. Over excavation & Recompaction:

1) Unless specified otherwise by a soils report, all areas on which structures are to be placed must be excavated to a depth of one (1) feet below bottom of proposed footings and recompacted, for a minimum distance of five (5) feet in all directions from the foundations of the structure.

2) Depth of over excavation may be increased by City Building Official.

b. Pad Elevation:

Building finish pad elevations shall be the higher of either of the following:

1) Building finish pad elevation shall be established so that the finish floor elevation is a minimum of twelve (12) inches plus 2% slope from the lowest adjacent flowline to the finish floor in accordance with the requirements of the California Building Code, latest edition.

2) Building finish pad elevations shall be established to allow a 1% drainage swale to be constructed from the middle of the lot's backyard to the street.

c. Compaction:

1) All fills and areas on which structures are to be placed shall be compacted to a minimum of 90 percent of maximum density.

2) Measurement of in-place compaction shall be determined by test methods referenced in the California Building Code, latest edition and so certified by tests and report from the soils engineer.

3) Soils testing for areas to remain private property shall be the responsibility of the Developer. Location and frequency of the tests shall be determined by the project design engineer and approved by the City Engineer.

4) Soils testing for areas to be dedicated to the City shall be the responsibility of the City. Contractor shall notify the City two (2) business days prior to any compaction operation.

d. Fill Material:

All fill material shall be subject to the approval of the soils engineer and the City.

2.3 DRAINAGE GENERAL DESIGN POLICY

2.3.1 Flood Protection

2.3.1.1 All development constructed within the City shall be protected against flooding.

2.3.1.2 Protection shall mean that all above grade structures shall be a minimum of one (1) foot above the design water surface elevation of the design-year storm.

2.3.1.3 Flood protection shall be achieved through the design and construction of surface drainage, waterways, and basins.

2.3.1.4 Upon request of the City Engineer, the Developer's engineer shall submit calculations demonstrating that proposed facilities within a Development will be protected from flooding as described above.

2.3.2 Flow Onto Adjacent Properties

Each Development shall be constructed so as not to drain onto adjacent properties except as otherwise provided in this section.

2.3.3 Designing for Off-site Storm Water Runoff

2.3.3.1 When existing conditions are such that off-site areas contribute runoff to a Development, the flows from offsite must be contained in a manner consistent with these standards. Offsite flows shall not be diverted onto adjacent properties.

2.3.3.2 Diversion of off-site storm water away from a Development will only be allowed so as to conform to any "Comprehensive Drainage Plan" which may be in place at the time the plans are approved by the City. Unless diversion of storm water is required to conform to a comprehensive drainage plan, off-site storm water shall be received and discharged at the locations which existed prior to development and as nearly as possible in the manner which existed prior to development. Should diversion be required, sufficient work shall be done upstream and/or downstream to provide all affected properties at least the same level of flood protection as existed prior to the diversion.

2.3.4 Conformance with Comprehensive Drainage Plans

When a comprehensive drainage plan, as provided for in Section 66483 et seq. of the Subdivision Map Act, has been adopted, the Developer shall conform to the plan unless specific alterations are approved by the City Engineer.

2.3.5 Pipe Storm Drains

2.3.5.1 Pipes are the preferred method of storm water conveyance and shall be required for all waterways unless alternate methods are expressly approved or required by the City Engineer. Requests for approval shall be made in writing.

2.3.5.2 Any requests for systems of underground drainage facilities, other than pipe, shall be made in writing to the City Engineer.

2.3.6 Open Channels

2.3.6.1 Generally speaking, open channels and waterways are prohibited unless expressly allowed by the City Engineer.

2.3.6.2 Open channels shall be fenced as approved by the City Engineer. Any landscaping shall be designed for minimum maintenance and risk to the public. Plant materials and arrangements thereof shall be subject to the approval of the City Engineer and the Planning Department.

2.3.7 Privately Maintained Drainage Systems

All drainage facilities constructed outside of public rights-of-way shall be maintained by the Developer in accordance with all applicable state and local laws.

2.3.8 Design Aids

Certain design aids are referenced to within these standards and shall be used where expressly required and otherwise may be used in designing drainage facilities. Other design aids referred to may be used, upon approval by the City Engineer.

2.4 DRAINAGE HYDROLOGIC DESIGN

2.4.1 General

2.4.1.1 Hydrologic design shall be based upon the land area, both developed and undeveloped, that is tributary to the project site.

2.4.1.2 The Developer shall evaluate the average recurrence interval of the 10-year, 25-year, and 100-year storm events for the pre-development and post-development conditions.

2.4.1.3 Average recurrence interval is defined as the average number of years, over a long period of time, between actual occurrences of a hydrological event of a given or greater magnitude.

2.4.1.4 The Developer shall design a drainage network to fully attenuate the incremental flow (difference between the10-year, 25-year, and 100-year pre- and post-development flows) leaving the development.

2.4.1.5 Full attenuation shall be achieved when the incremental storm water (both generated on-site and off-site) is received and discharged at locations which existed prior to development and in the manner of discharge which existed prior to development.

2.4.2 Method of Computation of Discharge for Drainage Area

2.4.2.1 The “Rational Method” or the “Alternative Rational Method” guidelines in addition to the following shall be used as the method of computation to determine the discharge of storm runoff. Should the criteria for the use of the “Alternate Rational Method”, as defined in Appendix VII of the Kern County Hydrology Manual, necessitate the use of the “Rational Method”, as defined in Section D of the Kern County Hydrology Manual, Section D shall be used.

a. Initial Time of Concentration (Tc)

1) Initial time of concentration for R-1 & R-2 zoning shall be 15 minutes (roof to gutter) plus the time necessary for runoff to make its way through the initial area.

2) Initial time of concentration for R-3, or any commercial or industrial developments zoning shall be 10 minutes (roof to gutter) plus the time necessary for runoff to make its way through the initial area.

b. Rainfall Intensity (I)

1) Rainfall intensity for 5, 10, 25, 50, & 100 year events shall be per the Rainfall Intensity Duration Frequency Chart recreated in City Standard Drawing 2.9 from data found in the Kern County Hydrology Manual.

c. Impervious Area (ai)

1) Acceptable design values of impervious area values shall be as shown in City Standard Drawing 2.9 or from data found in the Kern County Hydrology Manual.

d. Runoff Coefficient (C)

1) Runoff Coefficient calculations account for runoff from pervious areas (1-ai) as well as runoff from impervious areas (ai) when the rainfall intensity is greater than the soil infiltration rate (i.e. when I > Fp). When the rainfall intensity falls below the soil infiltration rate (when I < Fp), the runoff coefficient is a function of the impervious area only.

2) Runoff Coefficient shall be determined either from the formulas shown in City Standard Drawing 2.9 or from formulas and data found in the Kern County Hydrology Manual.

2.4.2.2 Rational Method Conditions of Use (Kern Co. Hydro. Manual Sec. D)

a. The use of the Rational Method shall be limited to developments meeting the assumptions /criteria outlined below.

1) The frequency of the storm runoff is the same as the frequency of the rainfall producing the runoff

2) The peak runoff occurs when all effective parts of the watershed are contributing to the runoff.

3) The watershed must be less than 640 acres.

2.4.2.3 Alternative Rational Method Conditions of Use (Kern Co. Hydro. Manual App. VII)

a. The use of the Alternative Rational Method shall be limited to developments meeting the criteria outlined below. All of these criteria are required to use this method.

1) There shall not be an off-site undeveloped watershed contributing to the development.

2) The development must be homogenous in terms of development type and density (i.e. residential, commercial, industrial)

3) The development must be homogenous in terms of SCS soil type (i.e. Type A, D, etc.).

4) The watershed must be less than 640 acres.

2.4.2.4 When off-site drainage areas increase the size of the watershed to over one square mile (640 acres), the methodology set forth in Section E of the Kern County Hydrology Manual (Unit Hydrograph Method) shall be applied as directed by the City Engineer.

2.4.2.5 For all watersheds of four square miles or greater, the runoff shall be determined using one of the following methods as directed by the City Engineer.

a. US Army Corps of Engineers Hydrologic Center computer model HEC-1 or equivalent.

b. Soil Conservation Methods as detailed in Technical Release No. 55 "Urban Hydrology for Small Watersheds."

c. Hydrologic methods as described in the “Kern County Hydrology Manual”

2.4.2.6 Alternate methods of computation will be permitted following an evaluation performed by the City. The evaluation shall include all computations necessary to convince the City Engineer of the adequacy of the alternate method, up to and including, a complete hydrologic analysis of the development using one of the approved methods noted above. The Developer shall pay all fees associated with the evaluation.

2.5 DRAINAGE HYDRAULIC DESIGN

2.5.1 General

For the solution of hydraulic design problems commonly encountered, generally accepted references should be consulted. For uncommon design problems, the design engineer shall provide such reference, treatise, model study report, or prototype test as is necessary to confirm his hydraulic design.

2.5.2 Design Storm Frequency

2.5.2.1 5-Year Event: Design depth of flow in gutters shall not exceed six (6) inches during the 5-year flow. Street capacities and depth of flow can be determined using the Gutter Flow Charts found in Section D of the Kern County Hydrology Manual.

2.5.2.2 10-Year, 25-Year, and 100-Year Events: Where the 10-year, 25-yr, or 100-year event discharge exceeds six (6) inches in gutters and street sections, a storm drain or other facilities, including inlets, shall be provided. Storm drain or other facilities shall be designed in accordance with these standards Manning’s "n" Values

2.5.2.3 Manning’s “n” values for design shall be as follows:

a. Reinforced concrete pipes n=.013

2.5.2.4 For natural channels, or landscape channels, “n” values shall be submitted by the design engineer for approval by the City Engineer.

2.5.3 Pipe Storm Drains

2.5.3.1 Water depth at design flow for storm drains shall not exceed 0.80 of the diameter of the pipe.

2.5.3.2 The hydraulic grade line for pipe shall conform to the following provisions;

a. At inlets and non-pressure type manholes the hydraulic grade line shall be not less than 0.5-foot below the normal gutter flowline elevation.

b. In addition to normal friction losses, energy losses due to entrance and exit conditions, bends and transitions shall be computed and considered.

c. At locations where pipes are stubbed out for future extension, the design hydraulic grade line shall be low enough to allow proper drainage of the tributary area with a minimum of 1.5 feet below adjacent ground level.

d. Hydraulic grade lines for pipes draining into retention or detention basins shall be designed to the half design depth elevation of the basin or the outlet pipe soffit elevation, whichever is greater.

e. Energy losses due to debris load caused by splitting flow at entrance to or within a pipe system shall be computed in the same manner as obstruction losses in open channels.

f. For pipes designed for supercritical flow, the energy grade line shall not be above ground level at inlets or non-pressure type manholes.

2.5.4 Open Channels

2.5.4.1 General:

a. Open channels shall be designed to carry the quantity of flow determined as set forth in Section 2.4 with the minimum freeboard between the design water surface and the top of bank of 0.5 feet or 20% of the specific energy (expressed in feet), whichever is greater. When the minimum freeboard does not provide the necessary differential elevation to allow adequate gravity drainage for projected development of the tributary areas, the design water surface in the channel shall be lowered sufficiently to allow such areas into drain to the channel by gravity.

b. The water surface profile shall be computed and plotted for all constructed channels.

2.5.4.2 Prior to computing the required freeboard, superelevation of the water surface on curves shall be determined, and the design water surface adjusted accordingly. Open channels shall not be designed with a slope in the range of + 20% of critical slope unless added freeboard for instability waves is provided.

2.5.4.3 Channels designed for supercritical flow shall have their subsequent depth below the top of bank.

2.5.4.4 Box culverts shall be designed with a minimum of 1-foot clearance between the design water surface elevation and the soffit.

2.6 DRAINAGE WATERWAY DESIGN

2.6.1 General

2.6.1.1 Structural design of drainage facilities placed within road, highway or street rights of way shall be subject to the approval of the City Engineer. Structural design of all other waterways and other drainage facilities shall conform to accepted engineering practices and to the criteria set forth below.

2.6.1.2 At the upstream end of open channels and pipes, construction shall be done so as to conform the new work to the existing waterway. This construction shall be such that hydraulic conditions in the upstream waterway will not be altered in a way which would cause degradation, erosion or other undesirable effects.

2.6.1.3 At the downstream end of a reach of an open pipe, interim works shall be constructed as necessary to insure proper operation of the drainage system. Excavation shall be performed in the downstream reach as necessary to insure complete gravity drainage of the Project until the downstream reach is constructed to an ultimate design.

2.6.1.4 Any required right of way for drainage facilities shall be conveyed to the City in one of the following forms, as directed by the City Engineer:

a. Separate parcel easement dedicated on a subdivision map

b. Easement dedicated on a subdivision map as part of adjacent lots

c. Easement offered or granted by separate documents.

2.6.1.5 All work shall be done in accordance with the California Department of Transportation Standard Specifications, current edition, unless noted otherwise by these standards.

2.6.2 Pipe

2.6.2.1 The minimum inside dimension for pipe shall be 18 inches, for publicly maintained systems. For privately maintained systems the minimum inside dimension shall be 12 inches.

2.6.2.2 Manholes shall be provided at all junctions, change in sizes, and angle points, and shall be placed at intervals not to exceed 300 feet for lines 30-inches and smaller and 400 ft. for lines above 30-inches. The minimum elevation change of invert in manholes shall be 0.10'.

2.6.2.3 The Developer's / Owner's engineer shall submit pipe inlet (catch basin) design in the development's hydrology report.

2.6.2.4 Whenever possible the alignment of closed conduits shall be as nearly straight as practicable. The closed conduit shall be placed within the traveled way. Alignments outside of the traveled way shall be as approved by the City Engineer.

2.6.2.5 Curved alignments for storm drain lines are permitted in special cases. All pipe placed on curves shall meet manufacturer's recommendations for curved alignment. The following criteria should be followed for curved storm drains 24-inches and smaller.

a. Alignments should follow the general alignment of streets.

b. The minimum allowable radius of curvature shall be the most conservative design of either the minimum allowable curvature radius for the street type or the minimum allowable curvature radius specified by the pipe manufacturer.

c. The minimum radius of curvature for concrete cast-in-place-pipe shall be determined by the formula R = 30D, where R = radius of curvature, and D = nominal internal pipe diameter, with R and D expressed in the same units.

d. Maintenance accesses (manholes) are required at the beginning and end of all curves.

e. Compression joints are required. The ASTM maximum allowable deflection of the pipe joints shall not be exceeded by a maximum of 25%.

2.6.2.6 Curved storm drains larger than 24-inches in diameter shall meet the requirements given above for smaller pipes except that the joints may be manufactured so that they fit together securely without deflection at the design curvature.

2.6.2.7 If curved storm drain alignments are contemplated, the pipe manufacturer should be consulted regarding manufacturing and installation feasibility as well as availability of proper cleaning equipment for storm drain maintenance.

2.6.2.8 All curves, radii, length of pipe joints, and types of pipe joint used to achieve designed curvature shall be shown on the plans. Developer /Owner's engineer shall furnish the City with a certification from the pipe manufacturing certifying that the curved storm drain construction design meets the deflection requirements of the manufacturer's pipe joint system.

2.6.2.9 Provide all buried storm drain lines with identification tape labeled “CAUTION BURIED STORM DRAIN BELOW” 18 to 24 inches above the pipeline.

2.6.2.10 All storm drain lines shall have a No. 10 bare soft copper detector wire placed over the pipe line prior to backfilling. The detector wire shall be brought up to the manhole frames at each end of the pipeline. Detector wire shall be secured to the manhole walls in a manner acceptable to the City Engineer.

2.6.2.11 Closed conduits shall be structurally designed to withstand earth and surcharge. Cover over the top of pipe shall be sufficient to prevent displacement of, or damage to, the conduit. A minimum of 2 feet of cover will be required in all cases. The cover required within road rights of way shall be 30” minimum.

2.6.2.12 Slopes for closed conduits shall be calculated to provide minimum water velocity of 2.5 feet per second during the 10-year storm event.

2.6.2.13 Acceptable Pipe Materials:

a. Reinforced Concrete Pipe (Class IV or equivalent**).**

2.6.2.14 Right of Way Requirements:

a. A right-of-way sufficient to contain the pipe and appurtenances plus a minimum of five feet on each side, measured from the edge of the pipe, shall be provided but in no case shall the right-of-way be less than 15-feet in width.

b. Whenever possible, rights-of-way for pipes shall be adjacent to property lines and outside of areas where structures are planned. Under no circumstances shall pipes and appurtenances be constructed less than 10-feet from any planned or existing structure.

2.6.3 Cross Gutters

2.6.3.1 Cross gutters will not be permitted across arterial streets. (See Division Five.)

2.6.3.2 Mid-block cross gutters will not be permitted.

2.6.3.3 Cross gutters shall conform to the provisions set forth in Division Five - Standards for Streets and Traffic Circulation.

2.6.4 Box Culverts

Box culverts shall be allowed only upon the approval of the City Engineer. The design shall be as approved by the City Engineer.

2.6.5 Inverted Siphon

2.6.5.1 Inverted siphons shall be allowed only upon the approval of the City Engineer. Design shall be approved by the City Engineer.

2.6.5.2 Inverted siphons shall be allowed:

a. Where these standards do not allow the construction of cross gutters,

b. Where the drainage study does not show the need for storm drain facilities that terminate into a detention or retention basin, and

c. When redesign does not relocate the drainage crossing to a place where a cross gutter can be used.

2.7 DRAINAGE BASIN DESIGN

2.7.1 Design Criteria

2.7.1.1 Unless otherwise directed by the City Engineer, for projects requiring special design criteria, storm water basins shall be based upon the runoff calculated based on Section 2.4.

2.7.1.2 Freeboard shall be required for all basins having a design water depth exceeding 18 inches. Six (6) inches of freeboard will be required when the design ponding depth within the basin is four (4) feet or less. For basins with a design ponding depth greater than four (4) feet the amount of freeboard required shall be one (1) foot. Freeboard shall be measured from the lowest gutter inlet or top of bank, whichever is lower.

2.7.1.3 Detention basins require special design consideration. The engineer shall have the design method approved by the Office of the City Engineer prior to designing the facility.

2.7.1.4 Basin layout and design shall be per City Standard Detail 2.5.

2.7.1.5 No basin will be permitted unless it shall be shown to the satisfaction of the City Engineer by percolation tests and analysis of soil borings, by a registered Civil Engineer, that the design volume of the basin will completely drain within five days. Percolation tests for these requirements shall be approved by the City Engineer. The method would be generally as follows:

a. The infiltration rate shall be determined using a Flooding type infiltrometer.

b. Divide depth of basin by infiltration rate to determine percolation time.

2.7.1.6 Maximum design water depth of a retention or detention basin shall be eight (8) feet from the Design Water Surface to the bottom, unless allowed otherwise by the City Engineer.

2.7.1.7 Slope stability analysis by a registered geotechnical engineer will be required for all basins with water depths exceeding 8 feet, or basin depths exceeding ten (10) feet measured from top of slope to bottom of sump.

2.7.1.8 The maximum allowable slope for a retention basin shall be as recommended by a registered geotechnical engineer, but in no case less than 2 horizontal to 1 vertical.

2.7.1.9 Acceptable drainage basin outlets shall be of the multi stage overflow pipe type, overflow weir type, pump discharge type, and any other outlets as approved by the City Engineer. Discharge from basin outlets shall be as close as possible to pre-development conditions. Outlet structures shall be constructed of durable materials such as concrete or coated corrugated metal pipe (CMP). The specific flow-controlling elements of an outlet structure may include one or more of the following: a circular orifice, a noncircular orifice, a rectangular weir, a trapezoidal weir, a triangular weir, a V-notch weir, culvert entrance control, or a riser overflow opening. Drainage basin inlet shall be as detailed in City Standard Drawing 2.5.

2.7.1.10 All drainage basins shall be equipped with an overflow system of the type acceptable to the City Engineer. Developer/Owner shall submit overflow design to the office of the City Engineer with the developments hydrology study and the storm drain plans for review and acceptance by the City Engineer.

2.7.2 Access

2.7.2.1 An equipment access ramp to the bottom of the retention basin shall be provided when the design depth exceeds 18 inches.

2.7.2.2 The ramp shall be a minimum of 12 feet wide with a maximum slope of 15%.

2.7.2.3 Ramps shall not be designed to convey drainage water into the sump.

2.7.2.4 Access gates shall be provided and shall be positioned near the top of the access ramp. Minimum width of the access gate shall be 14 feet wide.

2.7.3 Block Wall Requirements

2.7.3.1 Block walls conforming to the requirements outlined in Division Six are required for all basins.

2.7.3.2 Walls adjacent to streets at or near intersections shall conform to all “line of sight” ordinances of Division Five - Standards for Streets and Traffic Circulation.

2.7.4 Right-of-Way

The right-of-way required for the retention or detention basin shall be deeded to the City. Beneficiaries or trustees under Deeds of Trust shall sign the deed. Reversionary clauses will not be permitted.

2.8 DRAINAGE PIPING MATERIAL STANDARDS AND WORKMANSHIP

2.8.1 General

2.8.1.1 All materials shall conform to the requirements set forth in these standards.

2.8.1.2 The contractor shall supply any and all certificates of compliance, certified test results or shall perform tests as required to assure the City Engineer that the material being incorporated into the work has met the requirements as specified.

2.8.1.3 Requests to use materials not listed in these standards require approval of the City Engineer. Requests shall be made in writing separate from the plan submittal.

2.8.1.4 Material Tests

a. All tests to determine compliance with any of these specifications shall be made within the Continental United States.

b. If requested by the Engineer, the test results shall be certified by a materials testing firm acceptable to the City Engineer. A copy of test results shall be forwarded to the City Engineer.

c. Any materials delivered to the job site and suspected to be damaged shall be tested and the test results certified by a materials testing firm acceptable to the City Engineer.

2.8.2 Reinforced Concrete Pipe

2.8.2.1 Reinforced concrete drain pipe shall be manufactured in accordance with ASTM C-76 Class IV/2000D with rubber gasket joints and of the size as shown on the plans and shall conform to the provisions of Section 65, "Reinforced Concrete Pipe", of the State Specifications.

2.8.2.2 Upon demand, the manufacturer of precast concrete pipe shall furnish to the City a Certificate of Compliance that the pipe and fittings furnished under the contract comply with all applicable provisions of ASTM C-76.

2.8.2.3 Pipe shall utilize rubber-gasketed joints conforming to the requirements of ASTM C443 and shall be flexible and able to withstand expansion, contraction and settlement.

2.8.2.4 Acceptance shall be on the basis of plant load bearing tests, material tests, and inspection of manufactured pipe for visible defects and imperfections as defined in ASTM C507. Conduct tests on 2% of the number of pipes furnished for the project.

2.8.2.5 All pipe segments shall be marked with the class designation or corresponding D-load to produce a 0.01-inch crack, date of manufacture, and the name of manufacturer and plant.

2.8.2.6 The ends of reinforced concrete pipe sections shall be of such design that when properly laid they shall have a smooth and uniform interior surface.

2.8.3 Reserved

2.8.4 Precast Concrete Manholes

Refer to the applicable requirements of Section 3.3.5 and the standard details for storm drain manhole requirements.

2.9 EARTHWORK CONSTRUCTION

2.9.1 General

2.9.1.1 Earthwork shall consist of performing operations necessary to complete all excavation, preparation of subgrade, ditching, structural excavation, trenching, backfill compacting, sloping, trimming the subgrade, and finish grading.

2.9.1.2 Earthwork shall also include all clearing and grubbing, removal and disposal of paving, removal of water, excavation of all classes of earth and rock regardless of character and subsurface conditions and disposal of all excess excavation.

2.9.2 Earthwork in State and County Rights-of-Way

Earthwork within the rights-of-way of the State of California and the County of Kern shall be performed in accordance with requirements and provisions of the permits issued by those agencies for the construction within their respective rights-of-way. Such requirements and provisions, where applicable, shall take precedence and supersede the provisions of the specifications contained herein if more restrictive.

2.9.3 Safety Precautions

All excavations shall be performed, protected and supported as required for safety and in the manner set forth in the operating rules, orders and regulations prescribed by the Division of Industrial Safety of the State of California. Barriers shall be placed at each end of all excavations and at such places as may be necessary along excavations to warn all pedestrian and vehicular traffic of such excavations.

2.9.4 Clearing and Grubbing

2.9.4.1 All trees, brush, roots and other perishable and objectionable material, including existing pavement, base material, and concrete improvements to be removed shall be cleared from the project area and disposed of at a County approved dump site.

2.9.4.2 The ground surface of all areas where material is to be excavated or where embankments, stockpiles, fills or structures are to be placed, shall be cleared of all vegetation and rubbish, and all brush, roots and tree roots shall be grubbed and removed from such areas. All cleared and grubbed areas shall be maintained free from vegetal growth.

2.9.4.3 Organic material from clearing and grubbing operations will not be incorporated in any earthwork backfill.

2.9.5 Open Excavations and Stockpiling

Open excavations and stockpiles shall be controlled in a manner to prevent water running into excavations. Obstruction of surface drainage shall be avoided and means shall be provided whereby runoff can flow uninterruptedly in existing or established flowage courses, sewage, or temporary drains. Material for backfill or for protection of excavation in public roads from surface drainage shall be neatly placed and kept shaped so as to cause the least possible interference with public travel. Free access must be provided to all fire hydrants, water valves, meters, private drives, roads or existing access routes. Adequate barricades and lighting shall be provided by Developer to protect all persons from open excavations.

2.9.6 Obstructions

All underground improvements shall be preserved and protected. Where it is necessary to remove and replace or to relocate such improvements in order to prosecute the work, they shall be removed, maintained in operation, and permanently replaced as directed by the Developer of the discovered obstruction or as directed by the City.

2.9.7 Bracing Excavations

2.9.7.1 All excavations shall be properly supported in the manner prescribed by the rules, orders and regulations of the Divisions of Industrial Safety of the State of California. Excavations shall be so braced, sheeted and supported that they will be safe and the ground alongside the excavation will not slide or settle, and all existing improvements of any kind, either on public or private property, will be fully protected from damage. If any damage does result to such improvements, the Developer, at his own expense, shall make the necessary repairs or reconstruction as directed by the City.

2.9.7.2 Excavations shall be so braced or sheeted so as to provide conditions under which workmen may work safely and efficiently. The sheeting, shoring and bracing shall be so arranged as not to place any stress on portions of the completed work until the general construction thereof has proceeded far enough to provide ample strength. Any damage to structures occurring through settlements, water or earth pressures, slides, cave-ins or other causes shall be repaired before acceptance by the City.

2.9.7.3 Where timber sheeting extends below the invert of the pipe, it shall be cut off at the top of the pipe and the upper portion removed without harming the support conditions. This requirement will not be necessary where steel sheeting is used for shoring below the invert of the pipe.

2.9.7.4 Care shall be exercised in the drawing or removing of sheeting, shoring, bracing and timbering to prevent the caving or collapsing of the excavation faces which are being supported.

2.9.8 Correction of Faulty Grades

Where excavation is inadvertently carried below subgrade and/or foundation elevations, suitable provision shall be made for adjustment of the subgrade. The subgrade or foundation shall be restored to a condition similar to the condition existing prior to the over-excavation and by means acceptable to the City.

2.9.9 Dewatering

2.9.9.1 There shall be provided and maintained at all times during construction ample means and devices with which to promptly remove and properly dispose of all water from any source entering the excavations or other parts of the work. Dewatering shall be accomplished by methods which will ensure a dry excavation and preservation of the final lines and grades of the bottoms of excavations. Said methods may include well points, sump pumps, suitable rock or gravel placed below the required bedding for drainage and pumping purposes, temporary pipelines and other means, all subject to the approval of the City.

2.9.9.2 Dewatering for structures and pipelines shall commence when groundwater is first encountered and shall be continuous until such times as water can be allowed to rise in accordance with the provisions of this section. No concrete footings or floors shall be laid in water nor shall water be allowed to rise over them until the concrete or mortar has set at least eight hours. Water shall not be allowed to rise unequally against walls for a period of 28 days.

2.9.9.3 Water from the Work shall be disposed of in a suitable manner without damage to adjacent property. No water shall be drained into work built or under construction without prior consent of the City. Water shall be disposed of in such a manner as not to be a menace to the public health.

2.9.10 Blasting and Explosives

2.9.10.1 Written permission of the City shall be obtained prior to any blasting or use of explosives. Explosives, if used, shall be of such quantity and power and shall be used in such locations so as to minimize opening of seams and disturbing of the material outside the prescribed limits of excavation. As excavation approaches its final limits, the depths of holes for blasting and the quantity of explosives used for each hole shall be reduced so that the underlying or adjacent material will be disturbed or shattered as little as possible.

2.9.10.2 Extreme care shall be exercised when blasting in the vicinity of existing structures, utilities or construction facilities of others.

2.9.10.3 All blasting shall be done in conformance with the provisions of the Construction Safety Orders of the California Department of Industrial Safety, California Administrative Code, Article 5, Title 8.

2.9.11 Compaction Tests

2.9.11.1 Compaction in public areas not in State or County rights-of-way shall be tested at locations selected by the City. Percent relative compaction shall be deemed the percent of maximum dry density as determined by ASTM D-1557 (5-layer). Initial compaction tests for the above noted areas will be made by the testing laboratory under contract with the City. The Contractor shall make all necessary excavations for compaction tests as directed by the City.

2.9.11.2 Compaction shall be deemed to comply with these Standards when no test falls below the specified relative compaction. The Developer shall pay the costs for any retesting or additional testing of work not conforming to these Standards.

2.9.11.3 Backfill of excavations within the rights-of-way of County streets and State highways shall be done in accordance with the requirements and to the satisfaction of the Road Department of the County and the State Division of Highways, respectively.

2.10 PIPELINE TRENCH EARTHWORK

Refer to Section 3.6 for pipeline trench earthwork requirements.

2.11 DRAINAGE PIPING CONSTRUCTION

2.11.1 Connection to Existing Storm Drain Systems

2.11.1.1 Where new storm drain mains are to be connected to the City's existing storm drain system, the tie-in location and details must be shown on the plans & approved by the City Engineer. Mains must be connected to other mains with a junction manhole.

2.11.2 Material Handling

2.11.2.1 All pipe material shall be handled, laid, blocked and joined in accordance with the manufacturer's recommendations.

2.11.2.2 All open ends of all pipe being installed shall be properly covered at the end of each day's work to prevent entry of foreign matter, animals, debris, or children.

2.11.3 Installation of Reinforced Concrete Pipe

2.11.3.1 Each joint shall be sealed to prevent leakage.

2.11.3.2 The ends of the pipe shall be thoroughly cleaned immediately prior to joining sections of pipe.

2.11.3.3 The two sections joined shall be firmly placed together in such a manner that the tongue or gasket end of the pipe is forced as far as possible on the bell end of the pipe. No appreciable gap shall exist at the completed joint, except as permitted by the City at locations where curves in the pipe alignment are specified or required. Excessive gaps in any case shall be cause for rejection of the Work, and corrective measures shall be taken when ordered by the City.

2.11.3.4 Reject and replace pipe exhibiting any of the following:

a. Fractures or cracks passing through the wall, except for a single end crack that does not exceed the depth of the joint.

b. Defects that indicate imperfect proportioning, mixing, and molding.

c. Surface defects indicating honeycombed or open texture.

d. Damaged or cracked ends where such damage would prevent making a satisfactory joint.

e. Any continuous crack having surface width of 0.01 inch or more and extending for a length of 12 inches or more, regardless of position in the wall of the pipe.

f. Exposure of any reinforcement indicating incorrect placement.

g. Any tested pipe that fails to meet the specified D-load.

2.11.4 Reserved

2.11.5 Installation of Precast Concrete Manholes

Refer to the applicable requirements of Section 3.4.8.

2.11.6 Pipeline Testing

2.11.6.1 General Requirements

a. It is the intent of these specifications that completed storm drain lines, manholes, and other appurtenances shall be watertight.

b. Each section of storm drain line between two successive manholes shall be tested for leakage.

c. Tests shall be performed after all soil compaction work, including compaction of road base material, has been completed.

d. If the leakage rate is greater than the amount specified, the pipe joints shall be repaired or, if necessary, the pipe shall be removed and re-laid. The storm drain will not be considered acceptable until the leakage rate, as determined by test, is less than the allowable.

e. Test plugs shall be of the inflatable type, braced to contain a minimum of 5 psi over the pipe cross section area.

f. When more than one pipe size is included in a test section, determine the test time by the criteria of ASTM C924 for concrete pipe.

g. Prior to testing, flush and clean the pipeline to wet the pipe surface and clean out debris than plug pipe outlets.

h. The Developer may, at his option, air test or water test for leakage, except where the difference in elevation between the invert of the upper structure and the invert of the lower structure is more than 10 feet. In this instance the air test shall be made.

2.11.6.2 Water Leakage Testing

a. Test each section of pipe between two successive structures by closing the lower end of the pipe to be tested and the inlet pipe of the upper structure with plugs or stoppers. Fill the pipe and structure with water to a point 4 feet above the invert of the open pipe in the upper structure or to a height of 10 feet above the invert of the pipe in the lower structure, whichever gives the least hydrostatic pressure on the lower structure.

b. The total leakage shall be the decrease in volume of water in the upper structure. The leakage shall not exceed 0.1 gpm per inch of nominal diameter of pipe per 1,000 feet of pipe being tested.

c. Test shall be performed for a minimum period of 240 minutes (4 hours).

d. If the leakage is greater than allowed, overhaul the pipe and, if necessary, replace and re-lay until the joints and pipe comply with this test. Complete tests before trench is paved.

2.11.6.3 Air Leakage Testing

a. Air tests for concrete pipe sizes 8 to 24 inches shall be conducted per ASTM C924, Table 1 and ASTM C1103 (Joint Acceptance Test) for pipes larger than 24 inches..

b. Test each section of pipe between two successive manholes by plugging pipe outlets with test plugs. Add air slowly until the internal pressure is raised to 4.0 psig. The compressor used to add air to the pipe shall have a blowoff valve set at 5 psig so that the internal pressure in the pipe never exceeds 5 psig. Maintain the internal pressure of 4 psig for at least two minutes to allow the air temperature to stabilize, then disconnect the air supply and allow the pressure to decrease to

3.5 psig. Measure the time in minutes that is required for the internal air pressure to drop from 3.5 psig to 2.5 psig. Compare the results with the values tabulated below.

1) Concrete pipe 24 inches and smaller

Nominal Pipe Size (In)	Time, Minutes / 1,000
4	0.3
6	0.7
8	1.2
10	1.5
12	1.8
15	2.1
18	2.4
21	3.0
24	3.6

2) Concrete pipe larger than 24 inches

(a) If pressure holds, or drops less than 1 psi in 5 seconds per joint, then the pipe is acceptable (i.e., 10 joints tested equals 50 seconds test time).

c. Guard against the sudden expulsion of a poorly installed plug or a plug that is partially deflated.

2.11.7 Manhole Test

2.11.7.1 Water tightness of manholes may be tested in connection with hydrostatic tests of the pipeline or at the time the manhole is completed and backfilled. Repair any leakage as a result of testing.

2.11.7.2 Fill the manhole with water to an elevation 1 foot below the bottom of the cone section with a maximum water depth of 20 feet. Where the manholes are tested with the pipeline, no additional leakage will be allowed above that for the main line pipe.

2.11.7.3 Where a separate manhole leakage test is performed or requested by the Owner's Representative, plug inlets and outlets with stoppers or plugs and fill the manhole to the limits indicated above. The maximum allowable drop in the water surface shall be 1/2 inch for each 15-minute period of testing. The test shall be performed for a minimum of 240 minutes (4 hours).

2.11.7.4 As an alternative to the hydrostatic testing, manholes may be tested per the vacuum method per ASTM C1244.

a. Test each manhole immediately after assembling the precast manhole segments together and prior to backfilling. If the manhole fails this initial test, make repairs to any cracks or other sources of leaks. Cracks longer than 2 inches shall be cause for rejection of the entire manhole segment or casting, and no patching shall be allowed in such segments.

b. Plug lift holes with grout. Do not place grout in the circumferential manhole joints containing the butyl rubber sealing compound before testing; Plug pipes entering the manholes, and securely brace the plugs from being drawn into the manhole.

c. Test each manhole a second time for final acceptance after backfilling in order to assure that the backfill operation did not damage the manhole. Retest any manholes that were damaged or moved during final grading and paving.

2.11.8 Inspection for Defective or Damaged Pipe in Place

2.11.8.1 After backfilling and pavement replacement is complete and upon completion of the air test or infiltration test, inspect the pipe for damage and other defects by means of a video survey as described below.

a. All installed storm drain lines shall be video inspected prior to Acceptance. The video shall be recorded and submitted to the City Public Works Department for review.

b. The video camera shall be lighted to provide a clear view of the entire pipeline.

c. Acceptable video formats include VHS and DVD only.

d. Should the video indicate any faulty installation of the pipe, repairs or replacements shall be made as determined by the City.

2.11.8.2 Schedule the inspection in advance with the Owner's Representative.

2.11.9 Special Testing Conditions for CIPCP

2.11.9.1 When the concrete has reached a minimum compressive strength of 3,000 psi, test the pipe with water to the specified test HGL. The line may be tested in one length or in sections. Maintain each test for 24 hours at the test pressure.

2.11.9.2 Repair leaks creating wet spots at the soil surface, or otherwise exposed by the test. Leakage loss during this test period shall not exceed 1,000 gallons per inside diameter inch per mile of pipe installed, for a period of 24 hours.

2.11.9.3 Where leakage exceeds the allowable, determine the cause and remedy it before the line is offered for retesting and acceptance. If the leakage is less than the allowable and individual leaks are observed, repair such leaks.

2.12 ACCEPTANCE

2.12.1 General

2.12.1.1 Prior to Acceptance of any storm drain line by the City, the Contractor shall clean and test all lines in the presence of City inspectors, as outlined above.

2.12.1.2 All cleaning and testing of storm drain lines shall take place after all construction work is completed up to, but not including, final paving.

2.12.1.3 The system will be inspected after final paving is completed and any damage to the system during final paving and cleanup will be corrected before final approval.

2.12.2 Cleaning

2.12.2.1 Care shall be taken during installation to avoid allowing dirt and other debris from entering the pipe.

2.12.2.2 Pipeline cleaning shall be accomplished by flushing and jet-cleaning to the satisfaction of the City Engineer.

2.12.2.3 All manholes shall be jet-cleaned prior to acceptance.

2.12.3 Testing

All installed storm drain pipe shall be tested in accordance with these standards, the recommendations of the manufacturer, and as acceptable to the City Engineer. All required test results must be submitted to the City prior to Acceptance.

2.13 SAMPLE GENERAL AND CONSTRUCTION NOTES

2.13.1 General Notes

General notes shall include all necessary notes to convey the intent of the City's grading and drainage standards, the project at hand, and as directed by the City Engineer. They shall include, but not be limited to the following.

2.13.1.1 48 hour inspection notice - Prior to the start of any phase of construction, the Office of the City Engineer shall be given at least 48 hours notice.

2.13.1.2 Contractor shall call Underground Service Alert (USA) and the City of Tehachapi Department of Public Works at least two (2) working days prior to the start of construction to mark the locations of existing utility lines.

2.13.1.3 Contractor shall obtain all necessary permits before start of construction. A permit shall be obtained from the City for all work to be performed in City right-of-way.

2.13.1.4 The locations of existing utilities and underground pipelines shown on these plans are approximate only. The contractor shall determine the exact location of all existing utilities and underground pipelines before commencing work. Contractor assumes all liability for any and all damages to existing utilities occasioned by his failure to exactly locate, preserve, and protect any and all underground utilities and pipelines.

2.13.1.5 Contractor agrees that he shall assume sole and complete responsibility for job site conditions during the course of construction of this project, including the safety of all persons and property; that this requirement shall apply continuously and not be limited to normal working hours; that the contractor shall defend, indemnify, and hold the Developer, Design Engineer, and the City harmless from any and all liability, real or alleged, in connection with the performance of work on this project, excepting the liability arising from the sole negligence of the Developer, Design Engineer, or City.

2.13.1.6 All construction work shall be performed in accordance with City of Tehachapi Subdivision and Development Standards, the recommendations contained in the preliminary soils report for the development, and as directed by the Design Engineer and approved by the City Engineer.

2.13.1.7 The Contractor shall provide the Design Engineer with “As-built” plans upon completion of the work. The cost thereof shall be paid by the Contractor. No building permit will be issued by the City of Tehachapi until such a time as the finished grading has been certified by the Design Engineer and “As-built” plans submitted to the City of Tehachapi Engineering Department. “As-built” plans shall be submitted electronically in .PDF format.

2.13.1.8 Approval of these plans does not relieve the Developer of responsibility for correction of mistakes, errors or omissions by same. If during the course of construction of these improvements, public interest requires a modification or departure from the City’s Specifications, Details, or these Improvement Plans, the City Engineer shall have authority to require in writing such modification or departure and specify the manner in which the same is done.

2.13.1.9 The design engineer shall exercise sufficient supervisory control during construction to ensure compliance with the plans, specifications, and codes within his purview.

2.13.2 Grading Notes

2.13.2.1 All existing improvements that are removed, damaged, or undercut shall be repaired or replaced as directed by the City Engineer, at the contractor’s expense.

2.13.2.2 Fill material shall be subject to the approval of the soils engineer. Building pads shall be graded to within 0.1' of the design elevations.

2.13.2.3 All areas in the site on which structures are to be placed must be compacted to 90% relative density, for a minimum distance of 5' in all directions from the foundations of the structure.

2.13.2.4 All fill material shall be moisture conditioned per the controlling soils lab recommendation or to at least 2% above optimum moisture and compacted to 90% relative density, as determined by test methods referenced in California Building Code

appendix Chapter 33, Section 3304, and so certified by tests and report from the soils engineer.

2.13.2.5 The placement of fill shall be in 6” maximum lifts, compacted with compaction equipment approved by the Design or Soils Engineer, unless specifically recommended otherwise in the preliminary soils report.

2.13.2.6 Ground surfaces to receive concrete driveway and bituminous pavements should be scarified and compacted to a minimum depth of 12 inches below the grading plane in cut areas or to 12 inches in areas to receive fill. Engineered fill placed in proposed pavement areas should conform to the requirements specified by soils engineer. Compaction in proposed pavement areas should be a minimum of 95% of the maximum density as obtained by ASTM Test Method D1557-78, Method A, and should extend to a minimum of two feet beyond the outside edges of pavements.

2.13.2.7 Finished slopes nearer than five feet from building foundations should be graded no steeper than five horizontal to one vertical (5:1). A slope ratio of two horizontal to one vertical (2:1) should provide adequate stability for slopes farther than five feet from footing lines. Steeper slopes require the approval of the soils engineer and the City of Tehachapi. The grading contractor shall grade the lot pads as shown on the typical cross sections. The swales shall be constructed by others at a later date.

2.13.2.8 No fill material shall be placed, spread, or compacted while it is frozen or thawing or during unfavorable weather conditions. When work is interrupted by weather conditions, fill operations shall not be resumed until the soils engineer indicates that moisture content and density of previously placed fill are satisfactory.

2.13.2.9 All fill areas to be cleared of all vegetation and other unsuitable material for a structural fill and the areas shall be scarified to a depth of 6", unless specifically noted otherwise in the preliminary soils report.

2.13.2.10 All slopes in excess of three feet shall be prepared and maintained to control against erosion.

2.13.2.11 Surface drainage to be 1% minimum.

2.13.2.12 Grading work shall be supervised as engineered grading in accordance with Chapter 33 of the California Building Code.

2.13.2.13 The Contractor shall be responsible to provide adequate notice and access during site grading activities for testing and certification by the soils engineer. This shall include, but not be limited to, access for each compacted lift as the material is being placed in fills. No material will be placed on uncertified fill.

2.13.2.14 Pursuant to Section 3317.8 of the Uniform Building Code, if the Civil Design Engineer, Soils Engineer, or the Engineering Geologist of Record is changed during grading, the work shall be stopped until the replacement has agreed in writing to accept their responsibility within their area of technical competence for approval upon completion of the work. It shall be the duty of the permittee to notify the building official in writing of such change prior to the commencement of such grading.

2.13.2.15 During grading, reasonable searching should be performed for concealed subsurface obstructions. All abandoned subsurface obstructions should be removed. If the terminus of any abandoned piping is outside the project limits, the piping should be removed within the project and properly capped at the project boundary.

2.13.2.16 Dust Control: It shall be the contractor's responsibility to prevent a dust nuisance originating from the site of work as a result of his operations during the effective period of this contract. Preventative measures to be taken by the contractor shall include but not be limited to the following;

a. Water shall be applied to all unpaved areas as required to prevent the surfaces from becoming dry enough to permit dust formation.

b. Paved surfaces over which vehicular traffic is permitted to travel shall be kept free of dirt.

2.13.2.17 Developer to coordinate with the inspector and developer, the location of the borrow or spoil areas prior to beginning construction.

2.13.2.18 The soils engineer shall certify that the required inspections and tests have been performed and that such tests comply with the code.

2.13.2.19 No rock or similar material greater than 6" in diameter will be placed in the fill unless recommendations for such placement have been submitted by the soils engineer in advance and approved by the building official.

2.13.2.20 When material is being imported from an approved City borrow site, the after topographical survey of the excavated portion of the basin shall be submitted along with the Rough Grading Certificate(s).

2.13.3 Drainage Storm Drain Construction Notes

2.13.3.1 Contractor will furnish all materials, tools, labor, equipment and supervision necessary to complete installation and testing of the storm drain improvements as shown on the approved plans and specifications.

2.13.3.2 Reinforced Concrete (RCP) Pipe

a. Reinforced concrete drain pipe shall be manufactured in accordance with ASTM C-76 Class IV/2000D with rubber gasket joints and of the size as shown on the plans and shall conform to the provisions of Section 65, "Reinforced Concrete Pipe", of the State Specifications.

b. Pipe shall utilize rubber-gasketed joints conforming to the requirements of ASTM C443 and shall be flexible and able to withstand expansion, contraction and settlement.

2.13.3.3 Reserved

2.13.3.4 The locations of existing utilities and underground pipelines are shown in an approximate way only. The Contractor shall determine the exact location of all existing utilities and underground pipelines before commencing any work. The Contractor agrees to be fully responsible for any and all damages which might be occasioned by his failure to exactly locate, preserve and protect any and all underground utilities and pipelines.

2.13.3.5 Excavation shall be supported in conformance with the rules, orders and regulations of the Industrial Accident Commission and the Public Utilities Commission of the State of California. Sheet piling and other timbers shall be drawn in a manner that will prevent caving of the walls of the excavation or other load on the pipe or conduit.

2.13.3.6 All junction manholes and catch basins shall be constructed in accordance with the City Standard Details.

2.13.3.7 No concrete shall be poured for junction manhole bases and catch basins until the forms and reinforcement placement has been inspected and approved by the City.

2.13.3.8 The system will be inspected after final paving is completed and any damage to the system during final paving and cleanup will be corrected before approval, at the full expense of the contractor.

2.13.3.9 The contractor shall adjust manhole frames to grade and construct concrete collars around same after paving.

2.13.3.10 Hydro-hammer or similar high energy compaction equipment shall not be used for compacting backfill around manholes or backfill within pipeline trench.

2.13.3.11 Cleaning:

a. Any stoppage, dirt, or foreign matter shall be removed from the lines.

b. All cleaning and testing of storm drain lines shall take place after all construction work is completed.

2.13.3.12 Testing - Leakage Test:

a. Prior to final approval all storm drain lines shall be tested for leakage by standard hydrostatic or low pressure air test.

b. Testing of the storm drain line shall be conducted from manhole to manhole in accordance with the procedures outlined in City Standards.

c. If the pipe does not meet the leakage test, pipe shall be uncovered and the defective joint or pipe replaced. That section of pipe shall be re-tested until the pressure test is passed.

DIVISION THREE
STANDARDS FOR SANITARY SEWERS

3.1 GENERAL

3.1.1 Purpose and Scope

This division establishes the minimum standards for sanitary sewer systems for developments in the City of Tehachapi. Minor deviations from these standards may be permitted where warranted in the opinion of the City Engineer.

3.1.2 Enforcement

Provisions of these standards are enforceable by the City Engineer.

3.1.3 Waiver of Review Process

There are no provisions for the waiver of the review process for sewer improvement plans.

3.2 DESIGN STANDARDS

3.2.1 General

3.2.1.1 Sewer system improvements shall include, but not be limited to, furnishing and installing sanitary sewer pipelines and manholes including backfill, compaction, and street resurfacing; house laterals including mainline wyes; bored and jacked crossings including steel casing pipe; and sewer lift stations.

3.2.1.2 All costs for constructing sewer improvements shall be borne by the Developer, except for the incremental cost for oversizing any improvement beyond the immediate subdivision or parcel(s) for which the improvements are to be constructed.

3.2.1.3 In addition to the costs associated with the construction of sewer improvements as described above, the Developer shall also pay sewer connection and capacity fees as prescribed by the City.

3.2.2 Acceptable Sewage Discharges

3.2.2.1 The City shall accept discharges from the following plumbing fixtures: toilets, urinals, bidets, sinks for domestic faucets, showers, bathtubs, connections for dishwashers, drinking fountains, domestic washing machines and garbage disposals.

3.2.2.2 Discharges which are not acceptable to the City include, but are not limited to:

a. Any and all liquid or solid waste substance, from any producing, manufacturing, processing, or commercial, operation of whatever nature.

b. All piping from commercial-industrial processing to the sewers.

c. All floor or stall drains, other than domestic showers.

d. Swimming pools, ponds, etc., which empty into the sewer system.

e. Bleeders from any water system.

3.2.2.3 Establishments included under the above requirements include, but are not limited to:

a. Gasoline and diesel fuel stations, car washes, garages, laundromats, etc.

b. Sewage dump stations.

3.2.2.4 The City may require traps, interceptors, pretreatment, or other devices on all outlets which may discharge grease, oil, sand or waste material of any kind of a composition or quality deemed harmful by the City.

3.2.3 Sanitary Sewer Design Discharge

The following guidelines shall be used to compute contributing sewage:

3.2.3.1 Residential Use:

a. The average family unit shall be assumed to be three and one-half (3.5) persons per single family residential unit and three and one-half (3.5) persons per multi-family residential unit.

b. The average daily discharge of domestic sewage shall be assumed to be one hundred (100) gallons per day per person.

c. Peak flow for sewer design purposes from residences shall be assumed to be 2.0 times the average daily discharge.

3.2.3.2 Commercial / Industrial Use:

In the absence of any specific information to the contrary, the design peak discharge for commercial and industrial sewage shall be:

Land Use	Peak Discharge Rate	Peak Factor
Commercial	6,460 gpd/GA	1.8
Industrial	9,695 gpd/GA	2.0

GA = Gross Acre

3.2.4 Sanitary Sewer Design

3.2.4.1 Pipeline Design

Pipeline design shall be based on peak flows and on Manning's formula using roughness coefficients of "n" = 0.013 for VCP (see Section 3.3.4) and "n" = 0.011 for PVC (see Section 3.3.3) pipe.

3.2.4.2 Allowable Depth of Flows

Design peak flows in pipelines 12 inches in diameter and smaller shall be limited to a liquid depth to pipe (inside) diameter ratio of 0.50. Design peak flows in pipelines larger than 12 inches in diameter shall be limited to a liquid depth to pipe (inside) diameter ratio of 0.75.

3.2.4.3 Sewer Velocity

a. Minimum design velocity for any sanitary sewer shall be two (2) feet per second. Design velocities for sanitary sewers shall be computed using Manning's formula with a constant "n" value for pipes as specified in Section 3.2.4.1.

b. Maximum design velocity off any sanitary sewer shall be six (6) feet per second.

3.2.5 Sanitary Sewer Location, Alignment, Cover and Minimum Size

3.2.5.1 Location:

a. Sewers shall be placed in the public right-of-way.

b. All sanitary sewers and appurtenant structures located in streets or alleys shall be a minimum of five (5) feet from the roadway centerline. In no case shall a sanitary sewer line be located closer than five (5) feet from an existing or proposed gutter lip. Sanitary sewers shall be centered on travel lanes to the greatest extent possible.

c. Sewer lines will not be permitted in easements between the back yards or along the side yards of single or multi-family residential lots.

d. Location of sewer lines in easements shall be subject to the approval of the City Engineer. Where sewer lines are permitted within easements, the easements shall be dedicated to and accepted by the City.

3.2.5.2 Easement Width: The minimum width of any easement for sanitary sewer purpose shall be fifteen (15) feet. In special cases of terrain, depth of sewer line, access, etc. the required easement width shall be increased as required by the City Engineer.

All easements shall include right of ingress and egress over adjoining property for maintenance, replacement and operation. No permanent structures shall be constructed in such easements with the exception of fencing or utilities subject to overlapping easements.

3.2.5.3 Clearances: Sewers shall be designed to clear existing or proposed utilities by a minimum of twelve (12) inches. Clearances with water lines shall conform to Section 3.2.9.

3.2.5.4 Alignment:

a. Sewer lines shall be laid out in a straight line between structures.

b. Provide all buried sewer mains including gravity mains, force mains, and sewer laterals with detectible warning tape labeled “CAUTION BURIED SEWER MAIN BELOW” or “CAUTION BURIED FORCE MAIN BELOW” 18 to 24 inches above the sewer.

c. All sewer force main lines shall have a No. 10 bare soft copper detector wire placed over the pipe line prior to backfilling. The detector wire shall be brought up to the manhole and or cleanout frames at each end of the pipeline. Detector wire shall be secured to manhole and or cleanout walls in a manner acceptable to the City Engineer.

3.2.5.5 Cover:

Minimum cover for any sewer main shall be five (5) feet within the public right-of-way. Any deviation from this cover shall be approved by the City Engineer.

3.2.5.6 Minimum Size:

a. Minimum sewer size shall be eight (8) inches inside diameter.

b. Minimum sewer lateral sizes shall be from (4) inches inside diameter.

3.2.6 Manholes

3.2.6.1 Sewer manholes shall be constructed at:

a. Changes of slope in sewers.

b. Changes of direction of sewers.

c. Junction of sewers.

d. Junction of sewer and lateral if lateral is same size as sewer.

e. Termination of sewers.

f. Change of pipe size in sewers.

g. Other locations specified by the City.

3.2.6.2 Spacing

Maximum manhole spacing shall be 300 feet.

3.2.6.3 Head losses

Drop in invert elevation through manholes shall be based on 0.00 foot loss for straight run through manholes and 0.5 velocity head loss at peak flow velocity $\frac{V^2}{2g}$ = 0.1' @ 2.5'/sec (or $\frac{V^2}{2g}$ = 0.6' @ 6.0/sec) for right angle turns. No change of flow direction within a manhole shall exceed 90 degrees.

3.2.6.4 Pipeline Invert Identification:

Invert elevations at manholes shall be calculated and shown projected to the centerline of the manhole. Should there be any drop in elevation, the invert elevation "IN" and the direction, N, S, E or W, and invert elevation "OUT" and the direction shall be shown. Should a pipeline be joining a sewer of larger diameter, the smaller pipe shall have its soffit elevation equal to or higher than the soffit elevation of the larger sewer.

3.2.7 Reserved

3.2.8 Building Sewers (Laterals) and House Connections

3.2.8.1 Sewer laterals to single family homes shall be 4-inches internal diameter.

3.2.8.2 Sewer laterals for other discharges shall be based on scale design flows but shall be no less than four inches inside diameter.

3.2.8.3 A separate building sewer shall be provided to each lot, parcel or building. Subdivision of land into large parcels subject to potential future re-subdivision or multiple building sites may require additional laterals or increased lateral size, as directed by the City Engineer.

3.2.8.4 Sewer laterals shall be placed at such depth to give a minimum of 48-inches of cover to the top of the pipe at the property line or to edge of the easement. A minimum of 12-inches of clearance shall be maintained at all times between the sewer lateral and any domestic water pipe. The water pipe shall be above the sewer pipe. House connections shall not be laid less than 12-inches below ground surface in open areas, nor less than 18-inches under driveways, porches and steps, whether covered or uncovered, breezeways, roofed porte-cocheres, carports, covered walks, covered driveways and similar structures or appurtenances.

3.2.8.5 The location of each sewer lateral shall be marked at its upper end by stamping a letter “S” 1 ½ inches high on the top of the curb.

3.2.8.6 For commercial or industrial lots, building sewers shall be placed at a location approved by the City Engineer.

3.2.8.7 Sewer laterals shall be laid with a minimum grade of 1/4-inch per foot.

3.2.8.8 The house connection shall run in a straight line to the sewer lateral whenever possible. Any required changes in direction shall be made by the use of "tees", 1/16 bends, 1/8 bends, or by combination fittings. Any change from one size of pipe to another size shall be made with a reducer.

3.2.8.9 Sewer laterals shall be installed as specified in the Standard Details.

3.2.8.10 Cleanouts shall be placed in every house connection at the junction with pipe at the building, at intervals of not to exceed 50 feet in straight runs, and at changes in direction as specified in the Standard Details. The cleanout shall be the same diameter as the house connection line.

3.2.8.11 Cleanouts shall be placed at edge of right-of-way.

3.2.9 Requirements for Separation of Sewer and Water Lines

3.2.9.1 Separation of water and sewer mains shall be in compliance with the “California Waterworks Standards” discussed in Title 22, Chapter 16, Article 5 of the California Code of Regulations and the California Department of Health Services Regulations. Every effort will be made to adhere to these standards. Any deviation from these standards will require approval of the City Engineer.

3.2.9.2 Gravity Sewer Lines:

a. Gravity sewer lines shall be laid in separate trenches a minimum horizontal clear distance of ten (10) feet away from water lines.

b. Sewer lines shall be laid at a lower elevation than nearby water lines.

c. When pipelines must cross, the bottom of the water line shall be at least twelve (12) inches above the top of the sewer pipe.

d. If minimum separation cannot be attained as outlined in this section, pipelines shall be constructed in accordance with the State of California Department of Health Services Guidelines (Guidance Memorandum No. 2003-02).

3.2.9.3 Sewer Force Mains:

a. Sewer force mains shall be laid in separate trenches a minimum horizontal clear distance of ten (10) feet away from water lines.

b. When a sewer force main must cross a water line, the crossing should be as close as practical to the perpendicular. The sewer force main should be at least one foot below the water line.

c. When a new sewer force main crosses under an existing water main, all portions of the sewer force main within ten feet (horizontally) of the water main shall be enclosed in a continuous steel casing.

d. When a new water main crosses over an existing sewer force main, the water main shall be constructed of pipe materials with a minimum rated working pressure of 200 PSI.

3.3 MATERIAL STANDARDS AND WORKMANSHIP

3.3.1 General

3.3.1.1 All materials shall conform to the requirements set forth in these standards.

3.3.1.2 The contractor shall supply any and all certificates of compliance, certified test results or shall perform tests as required to assure the City Engineer that the material being incorporated into the work has met the requirements as specified.

3.3.1.3 Requests to use materials not listed in these standards require approval of the City Engineer. Requests shall be made in writing separate from the plan submittal.

3.3.1.4 Material Tests

a. All tests to determine compliance with any of these specifications shall be made within the Continental United States.

b. If requested by the Engineer, the test results shall be certified by a materials testing firm acceptable to the City Engineer. A copy of test results shall be forwarded to the City Engineer.

c. Any materials delivered to the job site and suspected to be damaged shall be tested and the test results certified by a materials testing firm acceptable to the City Engineer.

3.3.2 Pipe and Conduits

3.3.2.1 All pipe shall be of the size, material and strength as shown on the plans.

3.3.2.2 All pipe and fittings shall be marked or stamped with the trade brand name of the manufacturer, applicable ASTM standards, diameter, material, and strength or class of pipe.

3.3.2.3 All pipe shall be designed to withstand internal or external loads assumed in the design.

3.3.2.4 A certificate of compliance from the pipe manufacturer shall be provided for each type of material used.

3.3.2.5 All pipe shall be of the same material between structures.

3.3.3 Polyvinyl Chloride Pipe (PVC) and Fittings

3.3.3.1 General

a. Unplasticized polyvinyl chloride PVC pipe may be used on residential tract sewers and residential house laterals not exceeding 12 inches in diameter.

b. The maximum design deflection for plastic sewer pipe shall be 3%.

3.3.3.2 Materials:

PVC pipe, fittings, couplings, and joints shall conform to the requirements of ASTM D-3034, SDR 35, and shall have gasketed joints.

3.3.3.3 Identification and Marks

a. All pipe, fittings, and couplings shall be clearly marked at an interval not to exceed 5 feet as follows:

1) Nominal pipe diameter.

2) PVC cell classification.

3) Company, plant, shift, ASTM, SDR, and date designation.

4) Service designation or legend.

b. For fittings and couplings, the SDR designation is not required.

3.3.3.4 Cell Classification

Pipe shall be made of PVC plastic having a cell classification of 12454-B, 12454-C, or 13364-B as defined in ASTM D 1784. The fittings shall be made of PVC plastic having a cell classification of 12454-B, 12454-C, or 13343-C per ASTM D 1784.

3.3.3.5 Test Requirements

Pipe, fittings, and couplings shall meet the requirements of the section titled "Requirements" of ASTM D-3034. During production of the pipe, the manufacturer shall perform the specified tests for each pipe marking. A certification by the manufacturer indicating compliance with specification requirements shall be delivered with the pipe. The certification shall include the test result data.

3.3.3.6 Gaskets

Gaskets shall conform to ASTM F-477. A single rubber gasket shall be installed in each bell end of a joint of pipe or fitting.

3.3.3.7 Joints

a. Use only elastomeric gasket joints. Field solvent welded joints shall not be allowed.

b. Where PVC pipe connects to VCP or other sewer pipe material, use couplings approved by the City Engineer.

c. Wyes or tees for house service connections shall be complete fittings. Resilient connectors conforming to ASTM C923 may be used. Connectors shall be located in top half of pipe and slightly off center in direction of service and encased in 2 sack slurry.

3.3.3.8 Fittings

PVC fittings shall include branches of every type and stoppers. Fittings shall be furnished and installed in conformance with these specifications.

3.3.4 Vitrified Clay Pipe (VCP) and Fittings

3.3.4.1 Materials

All VCP and fittings shall be of one class designated extra strength; vitrified; homogeneous in structure; thoroughly burned throughout their entire thickness; impervious to moisture; sound and free from cracks, checks, blisters, broken extremities, or other imperfections; and must give a metallic ring when struck with a hammer. Pipe shall be bell and spigot pipe, unless otherwise specified. Pipe ends shall be square with the longitudinal axis and sockets shall be true, circular and concentric with the barrel of the pipe. The thickness of the shell, the depth of the socket and the dimension of the annular space shall be within the limits of permissible variation to dimension standards of the specifications of the National Clay Pipe Institute, 14700 East Firestone Boulevard, Suite 111, La Mirada, California 90638, and to the applicable provisions of ASTM C-700 for the size of pipe used. All pipe and special fittings shall comply with the applicable provisions of the VCP specifications of the National Clay Pipe Institute with respect to the hydrostatic pressure test, size, shape, three-edge bearing load test and all other requirements of said specifications, unless otherwise specified herein.

3.3.4.2 Identification Marks

All pipe or fittings shall be clearly marked with the name of the manufacturer or with a trademark of a size and type.

3.3.4.3 Causes for Pipe Rejection

a. The following imperfections in a pipe or special fitting will be considered injurious and cause for rejection:

1) A single crack in the barrel of the pipe extending through the entire thickness, regardless of the length of such crack. A single crack which extends through one-fifth of the barrel thickness and is over 3 inches long. Any surface fire crack which is more than 1/32 inch wide at its widest point.

2) Lumps, blisters, pits or flakes on the interior surface of a pipe or fitting.

3) When the bore or socket of the pipe varies from a true circle by more than 3% of its nominal diameter.

4) When a pipe or fitting designated to be straight deviates from a straight line more than 1/16 inch per linear foot. The deviation shall be measured from a straightedge at a point midway between the ends of the pipe.

5) A point broken from either the socket or spigot end.

6) Tramp clays, grog or other foreign matter that have fused permanently to the exterior or interior surfaces of the pipe or fitting.

7) If, when placed in a vertical position, the pipes do not give a metallic ring when struck with a hammer.

3.3.4.4 Fittings

a. VCP fittings shall include branches of every type and stoppers. Fittings shall be furnished and installed in conformance with these specifications.

b. Stoppers

1) Vitrified clay stoppers shall be 3/4-inch in thickness and shall have a factory-made plasticized polyvinyl chloride compound joint material cast and bonded to the pipe, such as Wedge-Lock, Speed Seal, or approved equal. The material shall be molded and cured to a uniform hardness and compressibility and form a tight compression coupling when assembled. The material used for the compression joint shall conform to ASTM C-425.

2) Neoprene (synthetic rubber) stoppers shall be of the type manufactured by Pacific Clay Products, Interpace Corporation, or approved equal. The joint formed by the stopper and clay pipe shall be a tight compression coupling when assembled.

3) All joints for stoppers shall be adequate to withstand the internal pressure of the leakage and/or infiltration test; however, joints shall be made in such a manner that they may be removed without injury to the socket.

3.3.4.5 VCP at Manholes or Structures

A 2-foot VCP joint shall be placed at inlets and outlets to each manhole or structure to be constructed as shown on Standard Details.

3.3.4.6 Joints

All VCP and fittings shall be furnished with mechanical compression joints equal to Wedge-Lock, as manufactured by Pacific Clay; Speed Seal, as manufactured by Interpace Corporation; or Calder Couplings for plain end pipe. The compression joint on the spigot and bell ends of the pipe shall be factory made of polyurethane or other approved resilient element bonded onto the outside of the spigot and the inside of the bell to the pipe and molded and cured to a uniform hardness and compressibility to form a tight compression coupling when assembled. Materials for compression joints shall conform to ASTM C-425. An approved lubricant shall be used in the assembling of the pipe, and no further sealing element will be required. Joints shall be made watertight and root tight.

3.3.5 Precast Concrete Manholes

3.3.5.1 General

a. Precast concrete sewer manholes shall be constructed in accordance with the design, size and details and at the locations required and as approved by the City. The manholes shall be constructed of precast eccentric or concentric manhole units in accordance with the Standard Details.

b. Manhole locations are fixed and cannot be moved to accommodate pipe manufacturing or laying. If necessary, special lengths will have to be provided to meet manhole location requirements.

3.3.5.2 Materials and Workmanship

a. Manholes

1) Concrete for precast manhole units shall be Class A concrete (see Section 5.6). The precast cylinder units, the precast concrete taper sections and precast eccentric flat top sections shall meet the strength requirements for ASTM C-478. Precast manholes shall be equal in all respects to those as manufactured by Associated Concrete Products or centrifugally spun manhole units as manufactured by Ameron, or approved equal.

2) The minimum allowable steel reinforcing shall be hoops of No. 4 wire cast into each unit at adequate places as a precautionary measure for handling.

3) Each manhole section shall be neatly pointed on the inside and shall be set plumb.

4) Sections of various heights shall be used in order to bring the top of the manhole ring and cover to the required elevation.

5) The precast concrete manhole rings shall be joined with “Kent Seal”.

b. Manhole Bases

1) Manhole bases shall be constructed of Class A concrete. Concrete bases shall be formed and poured on undisturbed soil and/or on gravel subbase as approved by the City.

2) That portion of the base above the invert elevation of the sewer pipe shall be formed to provide a smooth channel section as shown on the Standard Details.

3) The forms shall be checked and approved by the City for accuracy of dimensions and relative smoothness prior to pouring the base. Channels shall vary uniformly in size and shape from inlet to outlet if required. The manhole base shall be poured as one monolithic pour.

c. Manhole Frames and Covers

1) Manhole frame and covers shall be made of ductile iron conforming to ASTM A536 and shall have an AASHTO H20 traffic rating.

2) Covers shall be dually hinged and incorporate a 90-degree blocking system to prevent accidental closure and come complete with hinge infiltration plugs

3) Covers shall be one-man operable using standard tools and shall incorporate a seating ring and be available in a nominal 24-inch and 36-inch clear openings and shall be able to be secured in place.

4) The frame depth shall not exceed 4 inches for 24-inch and 6 inches for 36-inch covers and the flange shall incorporate bedding slots and bolt holes.

5) All manhole frame and cover components shall be black coated.

6) Before leaving the foundry, all castings shall be thoroughly cleaned and subjected to a hammer inspection.

7) Each cover shall be ground or otherwise machined so that it will fit in its frame without rocking, and frames and covers shall be match-marked in sets before shipping to the site.

8) Covers shall have the words “SANITARY SEWER” cast thereon as shown in the Standard Details.

d. Drop Manholes

1) Drop manholes shall be constructed at the location specified by the City, and in conformance with the Standard Details.

2) The inside diameter of the drop inlet pipe shall be the same diameter as the intercepted sewer, unless otherwise approved by the City.

e. Stubs at Manholes

Pipe stubs shall be furnished and installed at manholes at locations required by the City. All stubs shall be plugged in a manner approved by the City and the method to be used shall be detailed on the Plans.

f. Watertightness of Manholes

1) It is the intent of these specifications that manholes and appurtenances be watertight and free from infiltration.

2) The adequacy of manholes and appurtenances as to watertightness shall be determined by filling the manhole with water.

3) Hydraulic testing shall be made in connection with the leakage test of the sanitary sewer.

4) Any evidence of leakage as a result of testing shall be repaired to the satisfaction of the City before the sewer is accepted by the City.

g. Raising of Manholes Within Surfaced Streets

Manhole frames and covers shall be raised to finish grade as shown on the Standard Details.

h. Temporary coverings over manholes shall be provided to keep dirt, runoff, and other material out of the sewer. Temporary covers shall be subject to approval by the City.

i. Manhole Steps

1) Steps shall be installed in manholes not to exceed 12 inches apart vertically.

2) Steps shall be constructed of 0.5 inch diameter, Grade 60, concrete reinforcing steel per ASTM A-615, covered with copolymer polypropylene plastic, Model PS2-PF, as manufactured by MA Industries, Inc., or equal.

3.3.6 Flushing Cleanout

3.3.6.1 All cleanouts including frame and cover shall be constructed in accordance with the City's Standard Details.

3.3.7 Building Sewers (Laterals) and House Connections

3.3.7.1 General

a. Sewer laterals shall be constructed of the same material as the mainline pipe and in conformance with these specifications. The term "sewer lateral" is used in these specifications to designate a branch sewer laid from a sanitary sewer main to a point on a street or public right-of-way or easement boundary from which sewer service to an individual building unit can be obtained through proper sewer extension by the property Developer and shall be constructed according to the form, dimensions and details shown on the Standard Details.

b. House connections shall be constructed of the type and size and at the locations approved by the City. The term "house connection" is used in these specifications to designate the sewer line extending from the house soil line 2 feet outside the building to and including its connection with the sewer lateral at the property line including all necessary fittings as shown on the Standard Details.

c. House connections shall be installed as specified by the most recent revision of the Uniform Plumbing Code.

3.3.7.2 Materials and Workmanship

a. Quality of Pipe and fittings

House connections shall be constructed of Asphaltic-Coated (interior & exterior) Ductile Iron Pipe, ABS Plastic Sewer Pipe, Schedule 80 polyvinyl chloride (PVC) pipe, SDR 35 PVC pipe, or vitrified clay pipe, all conforming to applicable sections of these Improvement Standards subject to the approval of the City for the specific situation:

b. Testing

1) All piping of house connections shall be tested in the presence of the City before the line is backfilled and before the Acceptance by the City.

2) All openings in the pipe shall be tightly closed except at the highest point and the piping filled with water. The entire length shall be tested with not less than a 4 foot head of water. All dead ends shall be relieved of air during the process of filling. Under this test condition, the water pressure shall remain constant without showing any addition of water or showing any leaks.

3) Test period shall be 15 minutes.

3.3.7.3 Preservation of Property

Any and all damages to private property which occurs as a result of the installation of the sewer lateral or house connection shall be repaired and/or restored to original condition. Prior to Acceptance by the City, a statement signed by the Developer is to be filed with the City that all damages incurred have been restored to the original condition or repaired to the City's satisfaction.

3.4 CONSTRUCTION STANDARDS

3.4.1 Connection to Existing Sewer System

3.4.1.1 Where new building sewer laterals are to be connected to the City's existing sewer system, resilient connectors conforming to ASTM C923 encased in 2 sack slurry shall be used; the tie-in location must be as approved by the City Engineer.

3.4.1.2 Where new sewer mains are to be connected to the City's existing sewer system, the tie-in location and details must be shown on the plans & approved by the City Engineer. Main sewers must be connected to other main sewers or outfall sewers with a manhole.

3.4.2 Material Handling

3.4.2.1 All pipe material shall be handled, laid, blocked and joined in accordance with the manufacturer's recommendations.

3.4.2.2 All open ends of all sewer mains being installed shall be properly covered at the end of each day's work to prevent entry of foreign matter, animals, debris, or children.

3.4.2.3 Pipe shall be stored on a smooth bed. The pipe shall not be dropped or dragged. Stored pipe shall be covered to protect it from ultraviolet light (sun's rays). PVC pipe with noticeable color changes resulting from exposure to ultraviolet light will be rejected by the City.

3.4.2.4 All pipe shall be laid without break, upgrade from structure to structure, with the bell ends of the pipe upgrade. Pipe shall be laid to the line and grade given so as to form a close concentric joint with the adjoining pipe and prevent sudden offsets of the flow line. The interior of the sewer pipe shall be cleaned of all dirt and superfluous materials of all description as the work progresses.

3.4.3 Installation of Sewer Pipe and Fittings

3.4.3.1 Installation of PVC pipe shall be in conformance with ASTM D-2321 (latest edition). During the months of April thru October, PVC pipe exposed to the sun prior to laying shall

be shaded from direct sun for at least thirty (30) minutes before connection is made to manholes. Allowance shall also be made for the movement of pipe at house branch locations.

3.4.3.2 At all times during construction up to final acceptance, the most downstream sewer line or manhole shall be plugged such that no water (potable or non-potable), debris, or foreign material of any kind shall pass into the existing sewer system. The plug (stopper) shall be installed in accordance with note Section 3.4.3.6.

3.4.3.3 Any pipe which does not comply with the Specifications, is out of round, or has been rejected by the City Engineer, shall be removed from the jobsite.

3.4.3.4 PVC wyes, tees and other types of branches shall be furnished and installed along with PVC sewer. Wyes shall be installed for all sewer house connections including foreseeable future sewer house connections. Tees shall be installed for chimneys where applicable. The longitudinal barrel of branch fittings to be placed in line and grade with the sewer mains shall be of the same diameter, quality and type as said sewer. Installation, earthwork and bedding for branches shall conform to the applicable provisions set forth for mainline sewer pipe. The branch of wye fittings shall be inclined upward at an angle of 45 degrees from a horizontal line. No wye or tee for sewer laterals shall be placed closer than 5 feet in the downstream side to the centerline of any structure.

3.4.3.5 Reserved

3.4.3.6 All joints for stoppers shall be adequate to withstand the internal pressure of the leakage and/or infiltration test; however, joints shall be made in such a manner that they may be removed without injury to the socket.

3.4.3.7 The socket and spigot configurations for the fittings and couplings shall be compatible to those used for the pipe.

3.4.3.8 Pipe shall be joined with elastomeric gasketed joints manufactured with a socket configuration which will preclude improper installation of the gasket and will ensure the gasket remains in place during the joining operation.

3.4.3.9 Joining of pipe shall be in accordance with the manufacturer's printed instructions, which shall be furnished to the City. The spigot end shall be inserted to the proper depth of the socket as indicated by the home mark.

3.4.3.10 All VCP and fittings shall be furnished with mechanical compression joints equal to Wedge-Lock, as manufactured by Pacific Clay; Speed Seal, as manufactured by Interpace Corporation; or Calder Couplings for plain end pipe. The compression joint on the spigot and bell ends of the pipe shall be factory made of polyurethane or other approved resilient element bonded onto the outside of the spigot and the inside of the bell to the pipe and molded and cured to a uniform hardness and compressibility to form a tight compression coupling when assembled. Materials for compression joints shall conform to ASTM C-425. An approved lubricant shall be used in the assembling of the pipe, and no further sealing element will be required. Joints shall be made watertight and root tight.

3.4.3.11 Pipe joints of the same material as the mainline shall be placed at inlets and outlets to each manhole or structure to be constructed as shown on Standard Details.

3.4.3.12 Tees and other types of branches shall be furnished and installed along with VCP sewer. Wyes shall be installed for all sewer house connections including foreseeable future sewer house connections. Tees shall be installed for chimneys where applicable. The longitudinal barrel of branch fittings to be placed in line and grade with the sewers shall be of the same diameter, quality and type as the sewers. Installation, earthwork and bedding for branches shall conform to the applicable provisions set forth for mainline sewers. Unless otherwise specified, the branch of wye fittings shall be inclined upward at an angle not greater than 45 degrees from a horizontal line. No wye or tee for sewer house connection branch shall be placed closer than 5 feet in the downstream side to the centerline of any structure.

3.4.4 Installation of House Laterals and House Connections

3.4.4.1 Each branch fitting shall have its barrel diameter equal to the diameter of the sanitary sewer main and the spur (or branch) diameter as necessary for connection to the sewer lateral. The spur pipe of branch fittings shall be inclined at an angle of 45 degrees from a horizontal line and shall be supported with compacted clean sand in accordance with the Standard Details. All branch fittings that are to be left unconnected shall be plugged in a manner approved by the City Engineer.

3.4.4.2 Sewer laterals shall be joined to "tee" branch fittings at the sanitary sewer main as set forth above by eighth bends. All sewer laterals shall be plugged with a stopper in the socket at the last joint of said sewer laterals which shall be securely joined and shall lie approximately at the public right-of-way boundary and/or property line.

3.4.4.3 Sewer laterals shall be laid with a minimum grade of 1/4-inch per foot.

3.4.4.4 All pipe shall be laid upgrade on an unyielding foundation true to line and grade and with a uniform bearing under the full length of the barrel of the pipe. Bell and spigot pipe shall be laid with sockets upgrade. Suitable excavations shall be made to receive the bells or collars of the pipe. All adjustments to bring the pipe to line and grade shall be made by scraping away or filling in under the body of the pipe and not by wedging or blocking. The grade of all house connections shall not be less than 1/4-inch to the foot towards the outlet except where otherwise permitted in writing by the City. A standard chimney pipe as shown in the Standard Details shall be constructed where the grade of the house connection without a chimney pipe would exceed 100%.

3.4.4.5 Cleanouts shall be installed at points where required by the City Engineer. Cleanouts shall be constructed according to the Standard Details.

3.4.4.6 House connections shall be tested in the presence of the City Engineer before the line is backfilled and before acceptance by the City. All openings in the pipe shall be tightly closed except at the highest point and the piping filled with water. The entire length shall be tested with not less than a 4 foot head of water. All dead ends shall be relieved of air during the process of filling. Under this test condition, the water pressure shall remain constant without showing any addition of water or showing any leaks. Test period shall be 15 minutes.

3.4.5 Test for Damaged or Defective Plastic Sewer Pipe in Place

3.4.5.1 Following the compaction of backfill and prior to the placing of permanent pavement, all sewers shall be cleaned and then mandrelled to measure for obstructions (deflections, joint offsets, and lateral pipe intrusions). A rigid mandrel shall be pulled through the pipe by hand. The mandrel shall have a cross section equivalent to a circle having a diameter of at least 95% of the average inside diameter for PVC pipe. The minimum length of the circular portion of the mandrel shall be equal to the nominal diameter of the pipe.

3.4.5.2 Obstructions encountered by the mandrel shall be corrected by the Contractor.

3.4.6 Tests for Alignment and Grade, and Damaged or Defective VCP Pipe in Place

After VCP pipe has been installed, tested for leakage and/or infiltration, backfilled to existing grade, and manholes raised to grade, the pipe shall be "balled" from manhole to manhole with a sewer scrubbing ball of type and size to be approved by the City Engineer. Should balling indicate any faulty installation of the pipe, repairs or replacements shall be made and the repaired section retested.

3.4.7 PVC and VCP Pipe Test for Leakage and Infiltration

3.4.7.1 It is the intent of these specifications that completed sewers, manholes, and other appurtenances shall be watertight.

3.4.7.2 Each section of sewer between two successive manholes shall be tested for leakage and/or, at the option of the City, for infiltration. Where groundwater is encountered, the infiltration test shall be made.

3.4.7.3 Tests shall be performed after all soil compaction work, including compaction of road base material, has been completed.

3.4.7.4 If the leakage and/or infiltration rate is greater than the amount specified, the pipe joints shall be repaired or, if necessary, the pipe shall be removed and re-laid. The sewer will not be considered acceptable until the leakage and/or infiltration rate, as determined by test, is less than the allowable.

3.4.7.5 Prior to testing, all service laterals shall be installed and shall be tested simultaneously with the sewers.

3.4.7.6 Leakage Test

a. The Developer shall, air test or water test for leakage, except where the difference in elevation between the invert of the upper structure and the invert of the lower structure is more than 10 feet. In this instance the air test shall be made.

b. Water Testing Procedure

1) Each section of sanitary sewer between two successive structures shall be tested by closing the lower end of the sewer to be tested and the inlet sewer of the upper structure with plugs or stoppers and filling the pipe and structure with water to a point 4 feet above the invert of the open sewer in the upper structure or to a height of 10 feet above the invert of the sewer in the lower structure, whichever gives the least hydrostatic pressure on the lower structure.

2) The total leakage shall be the decrease in volume of water in the upper structure. The leakage shall not exceed 0.1 gallon per minute per inch of nominal diameter of pipe per 1,000 feet of sewer pipe being tested. The length of house connections shall not be used in computing the length of sewer main being tested.

3) If the leakage, as shown by the test, is greater than allowed, the pipe shall be replaced and re-laid until the joints and pipe pass this test. All tests must be completed before street or trench is paved.

c. Air Test Procedure

1) Each section of sewer between two successive manholes shall be tested by plugging all pipe outlets with suitable test plugs. Air shall be slowly added until the internal pressure is raised to 4.0 pounds per square inch gage (psig). The compressor used to add air to the pipe shall have a blowoff valve set at 5 psig to ensure that at no time the internal pressure in the pipe exceeds 5 psig. The internal pressure of 4 psig shall be maintained for at least two minutes to allow the air temperature to stabilize, after which the air supply shall be disconnected and the pressure allowed to decrease to 3.5 psig. The time required for the internal air pressure to drop from 3.5 psig to 2.5 psig shall be measured and the results compared with the values tabulated below:

PVC and VCP PIPE				
Pipe Diameter (Inches)	**Test Time**		**Minimum Distance Between Manholes (Feet)**	**K Value**
	(Minutes)	**(Seconds)**		
8	3	46	320	0.704
10	4	43	260	1.10
12	5	40	215	1.58
15	7	35	170	2.47
18	8	30	145	3.56
21	9	55	125	4.85
24	11	20	105	6.34

2) The above-tabulated values shall be used for the respective diameter pipes, except where the distance between successive manholes is less than the above tabulated values, in which case the following formula will be used to determine the test time:

$$T = KL,$$

Where T = time in seconds, L = distance between successive manholes in feet, and K = appropriate value from above table.

3) If the pressure drop from 3.5 psig to 2.5 psig occurs in less time than the above-tabulated or calculated values, the pipe shall be replaced and re-laid until the joints and pipe shall hold satisfactorily under this test.

4) In pipe sizes twelve (12) inches and smaller, if the pressure drops below the specified 3.5 psig setting (zero pressure drop) for the time specified above, the pipe shall be considered faulty and shall be replaced and re-laid until such requirement of the zero pressure drop is satisfied.

3.4.7.7 Infiltration Test

If, in the construction of a section of the sewer between structures, groundwater is encountered, the end of the sewer at the upper structure shall be closed sufficiently to prevent the entrance of water and pumping of groundwater shall be discontinued for at least three days after which the section shall be tested for infiltration. The infiltration shall not exceed 0.1 gallon per minute per inch of diameter per 1,000 feet of main line sewer being tested and does not include the length of house laterals entering that section. Where any infiltration in excess of this amount is discovered, the sewer shall be immediately uncovered and the amount of infiltration reduced to a quantity within the specified amount of infiltration. Should, however, the infiltration be less than the specified amount, the Developer shall stop any individual leaks that may be observed when ordered to do so by the City. All tests must be completed before street or trench is resurfaced, unless otherwise determined by the City.

3.4.8 Installation of Manhole Frame and Covers

3.4.8.1 The elevations at which manhole frames and covers are to be set shall conform to the requirements set forth as required and as approved by the City.

a. Where the cover is in existing pavement or in the traveled way of the existing road shoulder, it is to be placed flush with the existing surface and a concrete collar is to be constructed as shown in the Standard Details.

b. Where the structure is outside the limits of the traveled shoulder but not in the roadside ditch, it shall be placed 1/10 foot or more above the existing ground surface.

c. Where the manhole cover falls in the existing roadside ditch or right-of-way, it is to be placed approximately 1-1/2 feet above the existing ground surface or as directed by the City.

d. Manhole frames shall be set at the required grade and shall be securely attached to the top precast manhole shaft unit with a grout bed and fillet as shown on the Standard Details. After the frames are securely set in the place provided herein, covers shall be installed and all necessary cleaning and scraping of foreign materials from the frames and covers shall be accomplished to ensure a satisfactory fit.

3.4.8.2 A temporary steel plate shall be placed atop every partially constructed manhole during construction until the final frame and cover is installed. The plate cover is intended to keep debris and storm water out of the sewer system during construction. The cover shall be weighted down so as to prevent movement during construction activities or a storm event.

3.5 ACCEPTANCE

3.5.1 General

3.5.1.1 Prior to Acceptance of any sewer line by the City, the Contractor shall clean and test all lines in the presence of City inspectors, as outlined above.

3.5.1.2 All cleaning and testing of sewer lines shall take place after all construction work is completed up to, but not including, final paving.

3.5.1.3 The system will be inspected after final paving is completed and any damage to the system during final paving and cleanup will be corrected before final approval.

3.5.2 Cleaning

3.5.2.1 Cleaning shall be performed with a Wayne-type sewer cleaning ball under hydrostatic pressure. Any stoppage, dirt or foreign matter shall be removed from the lines.

3.5.2.2 All manholes shall be water jet-cleaned prior to acceptance.

3.5.3 Testing

All installed sewer pipe shall be tested in accordance with these standards, the recommendations of the manufacturer, and as acceptable to the City Engineer. All required test results must be submitted to the City prior to Acceptance.

3.5.4 Video Survey

3.5.4.1 All installed sewer shall be video inspected prior to acceptance. The video shall be recorded and submitted to the City Engineer for review.

3.5.4.2 The video camera shall be lighted to provide a clear view of the entire pipeline and all service laterals and be able to record length of run.

3.5.4.3 Acceptable video formats include an electronic digital format.

3.5.4.4 Should the video indicate any faulty installation of the pipe, repairs or replacements shall be made as determined by the City.

3.6 PIPELINE TRENCH EARTHWORK

3.6.1 General

3.6.1.1 This section applies to the installation of sewer, water, and storm drain facilities.

3.6.1.2 Trenching and backfilling requirements are shown in the Standard Drawings.

3.6.1.3 For general earthwork requirements refer to Section 2.9 of these standards

3.6.2 Trench Width

3.6.2.1 The overall trench width shall not be more than 16 inches or less than 12 inches wider than the largest outside diameter of the pipe to be laid therein, measured at a point 12 inches above the top of the pipe. Excavating and retrenching shall be true to line so that a clear space of not more than 8 inches or less than 6 inches in width is provided on each side of the largest outside diameter of the pipe in place. For the purpose of this article, the largest outside diameter shall be the outside diameter of the bell, on bell and spigot pipe, and outside diameter of coupling for sleeve coupling pipe.

3.6.2.2 Where the trench width, measured at a point 6 inches above the top of the bell or sleeve of the pipe is wider than the maximum set forth above, the trench area around the pipe shall be reworked to restore a trench condition acceptable to the City. The reworking may result in the following operation, subject to the approval of the City: Placing sand around the pipe and to a point of 6 inches above the top of the pipe.

3.6.3 Limit of Excavation

Except by special permission of the City, the maximum length of open trench shall not exceed 600 feet in the aggregate at any one location including excavation, construction, pipe laying and backfilling. In addition, at locations where access may be somewhat limited, requiring rerouting of traffic, the City may reduce the maximum length of open trench permitted.

3.6.4 Trench Bottom for Pipe

3.6.4.1 The trench bottom shall be graded to provide a smooth, firm foundation at every point throughout the length of the pipe.

3.6.4.2 The trench shall be excavated to the established grade line of the outside bottom of the pipe. The bottom of the trench shall be scarified to a minimum depth of 3 inches below the bottom of the pipe and uniformly graded to produce a firm but yielding subgrade

which will provide uniform support of the pipe along the full length of each section. The bedding material so prepared throughout a minimum depth of 3 inches shall meet the requirements of these specifications.

3.6.4.3 If it becomes necessary to excavate below the established grade line in order to remove boulders or other interfering objects, the voids shall be filled with material densified in the manner specified for bedding materials.

3.6.4.4 Where excavation is in rock, hardpan, shale, or other similar hard and unyielding materials, the trench shall be excavated to a depth at least 6 inches below the established grade line of the outside bottom of the pipe and filled with material as specified in these specifications to grade line. The subgrade shall then be completed as previously stated. The material so placed shall be compacted to 90% relative compaction.

3.6.4.5 When excavation is in soft, unstable or excessively wet material which is unsuitable as a foundation for the pipe, such material shall be removed as directed by the City and replaced with aggregate to a depth approximately 3 inches below the grade line. The subgrade shall then be completed to the underside of the pipe using imported sand if so directed by the City.

3.6.4.6 At each joint in the pipe, the bottom of the trench shall be recessed in such a manner as to relieve the bell of the pipe or the pipe coupling of all load and to ensure continuous bearing along the pipe barrel upon the bedding material.

3.6.5 Trench Backfill

3.6.5.1 All trenches shall be backfilled after pipe, fittings and appurtenances have been installed. Whenever a relative compaction requirement value is specified herein, it shall be a percentage of the maximum density. Optimum moisture content and maximum density shall be determined in accordance with ASTM D 1557 (5-layer) and density of soil in place shall be determined using methods approved by the City.

3.6.5.2 All wood and waste material shall be removed from excavation prior to backfilling. Backfill material shall be approved in all cases by the City and shall be free of trash, wood, large rock, or other objectionable debris. Backfilling shall include the refilling and compaction of the fill in trenches of excavations up to the subgrade of the street or to the existing ground surface.

3.6.6 Selected Material for Pipe Bedding and Pipe Zone

Material for pipe bedding and pipe zone backfill shall be sand.

3.6.7 Imported Pipe Backfill Material

Whenever the excavated material is not suitable for bedding or backfill, in the opinion of the City, suitable imported material shall be used for pipe backfill.

3.6.7.1 Sand

If sand is to be used for pipe bedding or pipe zone backfill, it shall be free from foreign materials such as rocks, sticks, vegetation, etc., and shall meet the following gradation:

Sieve Size	Percentage Passing (By Weight)
3/8-inch	100
No. 4	75 - 100
No. 30	12 - 50
No. 100	5 - 20
No. 200	0 - 10

3.6.7.2 Aggregate for pipe bedding foundation

If aggregate is required for pipe bedding foundation, it shall meet the following gradation:

Sieve Size	Percentage Passing (By Weight)
1 inch	100
3/4-inch	90 - 100
1/2-inch	30 - 60
3/8-inch	0 - 20
No. 4	0 - 5

3.6.8 Pipe Bedding

The pipe shall be carefully bedded during initial pipe zone backfill operations by hand placing, slicing with a shovel and tamping or "walking in" the material under the lower sector of the pipe to produce firm support for the full length of the barrel with full bearing to the horizontal centerline of the pipe.

3.6.9 Procedure at Pipe Zone

3.6.9.1 Subsequent backfill in the pipe zone shall consist of placing material as specified in these specifications simultaneously on each side of the pipe for the full width of the trench and compacting said material to a relative compaction of 90% within the limits of the pipe zone. The pipe zone begins at the bottom of the pipe barrel and extends to a horizontal plane 12 inches above the top of the outside diameter of the pipe.

3.6.9.2 The pipe shall be carefully bedded by hand placing and compacting clean imported sand as provided herein from the pipe foundation and/or subgrade to the horizontal centerline of the pipe prior to backfilling above the pipe within the “pipe zone”. Clean imported sand shall be used for the pipe bedding.

3.6.9.3 The pipe bedding, using clean imported sand, shall be compacted by approved methods to a relative compaction of 90%. The pipe bedding backfill shall be brought to optimum moisture content and shall be placed in layers not exceeding 6 inches in thickness and each layer shall be solidly tamped with the proper tools so as not to injure, damage or disturb the pipe. Backfilling shall be carried on simultaneously on each side of the pipe to assure proper protection of the pipe.

3.6.9.4 Where the pipe zone extends into the street zone, that portion of the pipe zone within the street zone shall be compacted as set forth in Sec. 3.6.12.

3.6.10 Procedure Above Pipe Zone

The remaining portion of the trench to within 2-1/2 feet of the finished roadway surface or ground surface, as the case may be, shall be backfilled, compacted and/or consolidated to obtain a relative compaction of 90%. Backfilling may be done with native trench side material except that no oil cake, bituminous pavement, concrete, rock or other lumpy material shall be used in the backfill, unless these materials are scattered and do not exceed 3 inches in any dimension. Material or perishable, spongy, or otherwise improper nature shall not be used in backfilling and no material greater than 3 inches in any dimension shall be placed within 1 foot of any pipe, manhole or structure.

3.6.11 Compaction in Open Fields

In open fields, where paving or structures will not be above the excavated area, backfill and compaction as specified in Section 3.6.10 shall extend to the top of the trench compacted to 90% relative maximum density, leaving the top slightly mounded.

3.6.12 Procedure at Street Zone

3.6.12.1 The top 2-1/2 feet of the trench within roadbed areas shall be compacted in horizontal layers not exceeding 8 inches in thickness, using approved hand, pneumatic or mechanical type tampers to obtain a relative compaction of 95% with a moisture content within 2% of optimum. Flooding and jetting will not be permitted. Compaction requirements in the street zone may be modified by the backfill requirements of other government agencies in areas where these agencies have jurisdiction.

3.6.12.2 From existing street grade to 2-1/2 feet below street grade, the material for backfill may contain stones ranging in size up to 2 inches in diameter, but not exceeding 20% of the volume where said coarse materials are well distributed throughout the finer material and the specified compaction can be obtained.

3.6.13 Excess Excavated Material

3.6.13.1 All surplus material not required for backfill shall be disposed of by the Developer outside the limits of the public rights-of-way and/or easements.

3.6.13.2 No excavated material shall be deposited on private property, unless written permission is secured by the property Developer. Before the City will accept the Work as being completed, the Developer shall file a written, notarized release signed by all property owners with whom he has entered into agreements for disposal of excess excavated material, absolving the City from any liability connected therewith.

3.7 SPECIAL CONSTRUCTION REQUIREMENTS (STEEL CASING)

3.7.1 General

Installation of steel casing pipe shall conform to the specifications and requirements of the State of California Department of Transportation (CALTRANS), Kern County Road Department, or other agency having jurisdiction. All necessary permits for the casing pipe installation must be obtained and copies submitted to the City prior to start of work.

3.7.2 Materials

3.7.2.1 Fabrication of steel casing pipe shall be in accordance with AWA C200, as modified below. Casing material shall conform to ASTM A 283, Grade C; ASTM A 139, Grade B; or ASTM A 36. Minimum wall thickness shall be 3/8-inch and diameter shall be approved by the City. The Contractor may select a greater thickness and diameter to accommodate t h e method of work, loadings involved, the site and possible interferences. Provide 2-inchgrout connections in the form of threaded couplings welded to the steel shell regularly spaced at 4 feet on centers at the top and bottom of the casing.

3.7.2.2 Join casing sections by butt-welding in the field. Prepare ends of casings for welding by providing 1/4-inch by 45º chamfer on edges.

3.7.3 Casing Seals

Casing seals shall be 1/8-inch-thick synthetic rubber, designed to fit snugly around pipe and casing. Casing seals shall be one piece with no field seams. Bands and hardware for attachment to pipe and casing OD shall be stainless steel. Products: PSI or equal.

3.7.4 Casing Installation

Steel casing pipe of the minimum sizes and thicknesses shown in the Standard Details shall be installed in place by jacking and/or boring methods, without the use of water or air.

3.7.5 Casing Pipeline

It shall be the Developer's responsibility for choosing a size of casing at/or above the minimum specified in order that the jacking may be done with a sufficient degree of accuracy to permit installation of the utility pipeline to the grades shown on the Plans. Should voids or loss of ground above the casing occur during jacking operations, the voids shall be filled with grout consisting of a lean mixture of cement and sand. Lean grout shall consist of one part Portland cement, four parts sand, and sufficient water to produce a workable mixture. Sand for grout to be placed

outside the casing shall be of such fineness that 100% will pass a No. 8 sieve and not less than 35% will pass a No. 50 sieve. The carrier pipe shall be installed in the casing as shown in the Standard Details.

3.7.6 Earthwork and Resurfacing

Earthwork and resurfacing shall conform to the earthwork and street resurfacing sections of these standards.

3.7.7 Sand Backfilling

After placement of the pipe within the casing, fill the intervening annular space between the pipe and the casing with sand. Sand shall be dry (water content between 3% and 6%), free from organic matter, and containing not over 5% by weight of deleterious substances. It shall be hard, dense, durable, clean, sharp, and shall have a finesses modulus per ASTM C136 of between 2.70 and 3.30. Sand shall be graded evenly from fine to coarse as follows:

SIEVE SIZE	PERCENT BY WEIGHT
¾-inch	- 100
No. 4	97 - 100
No. 8	79 – 85
No. 16	60 – 78
No. 30	36 – 47
No. 50	10 – 20
No. 100	0 - 4

Sand shall be applied with a Pneumatic gun and capped with casing seals as indicated in the Standard Details.

3.8 SAMPLE GENERAL NOTES

General Notes

General notes shall include all necessary notes to convey the intent of the City's sanitary sewer standards, the project at hand, and as directed by the City Engineer. They shall include, but not be limited to the following.

1. 48 hour inspection notice - Prior to the start of any phase of construction, the Office of the City Engineer shall be given at least 48 hours notice.

2. Contractor shall call Underground Service Alert (USA) and the City of Tehachapi Department of Public Works at least two (2) working days prior to the start of construction to mark the locations of existing utility lines.

3. Contractor shall obtain all necessary permits before start of construction. A permit shall be obtained from the City for all work to be performed in City right-of-way.

4. The locations of existing utilities and underground pipelines shown on these plans are approximate only. The contractor shall determine the exact location of all existing utilities and underground pipelines before commencing work. Contractor assumes all liability for any and all damages to existing utilities occasioned by his failure to exactly locate, preserve, and protect any and all underground utilities and pipelines.

5. Contractor agrees that they shall assume sole and complete responsibility for job site conditions during the course of construction of this project, including the safety of all persons and property; that this requirement shall apply continuously and not be limited to normal working hours; that the contractor shall defend, indemnify, and hold the Developer, Design Engineer, and the City harmless from any and all liability, real or alleged, in connection with the performance of work on this project, excepting the liability arising from the sole negligence of the Developer, Design Engineer, or City.

6. All construction work shall be performed in accordance with City of Tehachapi Subdivision and Development Standards, the recommendations contained in the preliminary soils report for the development, and as directed by the Design Engineer and approved by the City Engineer.

7. The Contractor shall provide the Design Engineer with “As-built” plans upon completion of the work. The cost thereof shall be paid by the Contractor. No building permit will be issued by the City of Tehachapi until such a time as the finished grading has been certified by the Design Engineer and “As-built” plans submitted to the City of Tehachapi Engineering Department. “As-built” plans shall be submitted electronically in .PDF format.

8. The design engineer shall exercise sufficient supervisory control during construction to ensure compliance with the plans, specifications, and codes within his purview.

Sample Standard Sewer Notes

1. Approval of these plans does not relieve the Developer of responsibility for correction of mistakes, errors or omissions by same. If during the course of construction of these improvements, public interest requires a modification or departure from the City’s Specifications, Details, or these Improvement Plans, the City Engineer shall have authority to require in writing such modification or departure and specify the manner in which the same is done.

2. Contractor will furnish all materials, tools, labor, equipment and supervision necessary to complete installation and testing of sewer improvements as shown on the approved plans and specifications.

3. Poly Vinyl Chloride Pipe (PVC), replace with applicable language for Vitrified Clay Pipe.

    a. Pipe and fittings shall meet the requirements of ASTM Specification D-3034 SDR-35. Pipe fittings shall be homogeneous throughout and free from cracks, holes, foreign inclusions or other injurious defects. Fittings shall be injection molded and shall be installed in line on new pipelines. Resilient connectors conforming to ASTM C923 encased in 2 sack slurry may be used at tie-in locations on existing pipelines.

b. Use only elastomeric gasket joints. The assembly of joints shall be in accordance with the manufacturer's recommendation and applicable ASTM specifications. Where PVC pipe connects to VCP, DI, or other existing sewer line materials, use couplings approved by the City.

c. Pipe and fittings should be installed in accordance with ASTM D 2321. Only class I, II, and III embedment materials will be considered suitable.

4. The locations of existing utilities and underground pipelines are shown in an approximate way only. The Contractor shall determine the exact location of all existing utilities and underground pipelines before commencing any work. The Contractor agrees to be fully responsible for any and all damages which might be occasioned by his failure to exactly locate, preserve and protect any and all underground utilities and pipelines.

5. Excavation shall be supported in conformance with the rules, orders and regulations of the Industrial Accident Commission and the Public Utilities Commission of the State of California. Sheet piling and other timbers shall be drawn in a manner that will prevent caving of the walls of the excavation or other load on the pipe or conduit.

6. Wye fittings shall be in-line type and shall be used for all lateral connections and shall be rotated a minimum of 45° above the horizontal plane running through the centerline of the main.

7. All manholes shall be constructed in accordance with the City Standard Details.

8. All flushing cleanouts shall be constructed in accordance with City Standard Details.

9. The system will be inspected after final paving is completed and any damage to the system during final paving and cleanup will be corrected before approval, at the full expense of the contractor.

10. The sewer contractor shall adjust manhole frames to grade and construct concrete collars around same after paving.

11. Hydro-hammer or similar high energy compaction equipment shall not be used for compacting backfill around manholes or backfill within pipeline trench.

12. Cleaning:

    a. Any stoppage, dirt, or foreign matter shall be removed from the lines.

    b. All cleaning and testing of sewer lines shall take place after all construction work is completed.

13. Testing - Mandrel Test of PVC Pipe:

    a. Following the placement and densification of backfill and prior to the placing of permanent pavement, all main line pipe shall be cleaned and then mandrelled to measure for obstructions (deflections, joint offsets, and lateral pipe intrusions).

b. A rigid mandrel, with a circular cross section, certified as having a diameter conforming to City specifications, shall be pulled through the pipe by hand. The minimum length of the circular portion of the mandrel shall be equal to the nominal diameter of the pipe. The mandrel shall have odd number of ribs, numbering no less than 9, spaced evenly around the mandrel.

c. If the pipe does not meet the mandrel test, pipe shall be uncovered and the defective joint or pipe replaced. That section of pipe shall be re-tested until the mandrel test is passed.

14. Testing - Pressure Test:

a. Prior to final approval all gravity sewer lines shall be tested for leakage by standard hydrostatic or low pressure air test.

b. Testing of the sewer line shall be conducted from manhole to manhole in accordance with the procedures outlined in City Standards.

c. If the pipe does not meet the pressure test, pipe shall be uncovered and the defective joint or pipe replaced. That section of pipe shall be re-tested until the pressure test is passed.

15. Video Inspection

a. All installed sewer shall be video inspected prior to acceptance. The video shall be recorded and submitted to the City's Engineering Department for review.

b. The video camera shall be lighted to provide a clear view of the entire pipeline and all service laterals.

c. Acceptable video format shall be of the digital electronic format only.

d. Should the video indicate any faulty installation of the pipe, repairs or replacements shall be made as determined by the City.

DIVISION FOUR
STANDARDS FOR WATER SYSTEMS

4.1 STANDARDS FOR WATER SYSTEMS

4.1.1 General

Water system improvements shall include, but not be limited to, furnishing and installing domestic water pipelines including backfill, compaction and street resurfacing; fittings including tees, crosses and elbows; valves including valve boxes; combination air-vacuum release valves and blowoffs; backflow prevention devices; bored and jacked crossings including steel casing pipe; water services and turnouts including meters and meter boxes or vaults; water supply wells; storage reservoirs and pressure storage tanks.

4.1.2 Purpose and Scope

This division establishes the minimum acceptable standards for design, materials and methods to be used in providing water systems for developments in the City of Tehachapi.

4.1.3 Waiver of Review Process

There are no provisions for the waiver of the review process for water improvement plans.

4.2 DESIGN STANDARDS

4.2.1 Non-Fire Water Supply Requirements

4.2.1.1 Non-fire water supply design demands include water used for all purposes other than firef ighting (see Section 4.2.2).

4.2.1.2 Non-fire water supply design demands shall be based on the following assumptions unless otherwise directed by the City Engineer:

a. Single family residences (SFR) shall be assumed to house 3.5 people. Average water demand shall be assumed to be 350 gpd/person.

1) SFR maximum day demand shall be assumed to be 2.5 times the average day demand.

2) SFR peak hour demand shall be assumed to be 3.5 times the average day demand.

3) A mobile home shall be counted as one-half of a SFR.

4) Multiple family housing such as duplexes and apartments shall be counted as one-half of a SFR.

b. Water demands for industrial and commercial areas shall be based on the anticipated water usage as proposed by the Developer and approved by the City Engineer. In no event shall the average day water demand for industrial and commercial areas be assumed to be less than the equivalent of five SFRs per gross acre.

1) Maximum day demand shall be assumed to be 2.5 times the average day demand.

2) Peak hour demand shall be assumed to be 3.5 times the average day demand.

c. Water demands for schools, churches, and similar types of water customers shall be as proposed by the Developer and approved by the City Engineer.

1) Maximum day demand shall be assumed to be 2.5 times the average day demand.

2) Peak hour demand shall be assumed to be 3.5 times the average day demand.

d. Design non-fire water demands for facilities not included above shall be as proposed by the Developer and approved by the City Engineer.

4.2.2 Fire Water Design System Demands and Hydrant Spacing Requirements

4.2.2.1 Fire flow and hydrant spacing requirements shall be as designated in the following table:

Fire Classifications	Minimum Fire Flow	Minimum Duration (Hours)	Maximum Hydrant Spacing
Residential Includes: 1 and 2 family dwellings			
0-3,600 sq.ft.	1000 GPM	2	500’
3,600 sq.ft. and above	1,500 GPM	2	500’
Commercial Includes: All commercial uses, hotels, apartments, multiple residence buildings, schools and colleges	1,500 GPM	2	330’
Industrial	1,500 GPM	4	330’

Exception: A reduction in required fire flow of up to 50 percent, as approved, is allowed when the building is provided with an approved automatic sprinkler system. The resulting

flow shall not provide less than the “Minimum Fire Flow” as delineated in the preceding table.

4.2.2.2 The fire flow requirements shall be determined by the fire chief and shall be computed on the basis of a minimum 20 psig residual operating pressure at the point of lowest pressure of the street from which the flow is measured. In setting the requirements for fire flow, the fire chief may be guided by the flow chart. The fire chief may require higher standards on the basis of local conditions, exposure, congestion, or construction of the building. The required fire flows are to be provided in addition to the domestic requirements.

4.2.2.3 Fire Hydrants spacing shall be computed separately for major highways, carrier corridors and railways.

4.2.2.4 The last hydrant on a cul-de-sac or stub street shall not be more than one-half (1/2) the maximum spacing from the end of the street.

4.2.2.5 A hydrant shall be placed at each intersection except where this would provide excessive hydrant coverage.

4.2.2.6 Additional on-site hydrants: When any portion of the facility or building is in excess of 150’ from a fire hydrant on a public street, as measured by an approved route around the exterior of the facility or building, on site fire hydrants and mains capable of supplying the required fire flow shall be provided when required by the fire chief.

4.2.2.7 Fire Hydrant Marking

Fire hydrants shall be clearly identified in an approved manner to prevent obstruction by parking and other obstruction by painting the curb fronting the hydrants red five feet either side of the hydrant. Hydrant location shall also be identified by the installation of a recessed blue reflective marker placed on the hydrant side of and 24 inches from the centerline of the road parallel to the hydrant.

4.2.3 Water System Design

4.2.3.1 Pressure:

a. Water distribution systems shall be designed to maintain operating pressures of not less than 35 PSIG during peak hour water demand.

b. Upon request of the City Engineer, computations shall be submitted to demonstrate that the minimum pressures will be met.

4.2.3.2 Looped Systems:

a. All distribution systems shall be designed to permit circulation of water flows throughout, unless otherwise waived by the City Engineer.

b. For cul-de-sacs greater than 330 feet in length, the water main shall be looped through the side lot lines, of the lots near the end of the cul-de-sac, back to adjacent streets, as directed by the City Engineer. Easements are required and are subject to Section 4.2.4.1.c.

c. Distribution system improvements required to serve a project or development which will be dedicated to the public, shall have at least two connections to waterlines in different streets to form a looped water system.

4.2.3.3 Pipe Diameter:

a. Water main minimum nominal diameters for distribution lines near Section lines in the City shall be twelve (12) inches or larger as directed by the City Engineer.

b. Water main minimum nominal diameters for distribution lines near Mid Section lines in the City shall be ten (10) inches or larger as directed by the City Engineer.

c. Water main minimum nominal diameters for developments in the City shall be eight (8) inches.

4.2.4 Water Main Location and Cover

4.2.4.1 Location:

a. When no precedent relative to main location in the street is established, all water mains shall be located in City owned and maintained streets or alleys a minimum of eight (8) feet from curb face on the opposite side of the sewer main installation. In no case shall a water main be located closer than two (2) feet from an existing or future gutter lip.

b. Water mains shall be designed to clear existing utilities by a minimum of twelve (13) inches as directed by the City Engineer, and proposed utilities by twelve (12) inches. Clearances with other agency utilities shall be as directed by the affected utility company.

c. Water lines installed outside City owned or maintained streets shall be placed in easements subject to the approval of the City Engineer. Mains will not be permitted in easements between the back yards of single or multifamily lots. Where water lines are located within easements, the easements shall be:

1) Be dedicated to and accepted by the City of Tehachapi.

2) The minimum width of any easement for water purposes shall be fifteen (15) feet. In special cases of terrain, depth of water line, access, etc. the required easement width shall be increased as required and approved by the City Engineer.

3) All easements shall include right of ingress and egress over adjoining property for maintenance, replacement and operation. No permanent structures shall be constructed in such easements, except fences, or utilities which are subject to any overlapping easement.

d. Provide all buried water lines including water service piping with detectible warning tape labeled “CAUTION BURIED WATER MAIN BELOW” 18 to 24 inches above the water line.

e. All water lines including water service piping shall have a No. 10 bare soft copper detector wire placed over the pipe line prior to backfilling. The detector wire shall be brought up to the valve boxes at all valve box locations along water mains and up to the water meter box for water service piping. Detector wire shall be secured to in the valve or meter box in a manner acceptable to the City Engineer.

4.2.4.2 Pipe Depth:

a. All water mains shall be installed so that the top of the pipe and fittings are not less than thirty-six (36) inches below finished paving of the street, unless a greater depth is specified in the excavation and/or encroachment permit.

b. All water service connections shall be installed with a minimum of thirty-six (36) inches of cover within the right of way.

c. The City may require more than the minimum cover if, in the opinion of the City, thirty-six (36) inches in insufficient.

4.2.5 Gate Valves, Valve Boxes and Vaults

4.2.5.1 Gate valves shall be located with sufficient frequency and spaced so that no large portion of the system will be out of service at any one time during repairs and new construction. Valve location shall be as designated below:

a. As a general rule, there shall be three valves on tees and four valves on crosses. On long blocks, intermediate valves shall be installed so that not more than 600 feet of line will have to be shut off at any one time.

b. When water mains are in easements outside traveled streets, a valve shall be located at each end of the easement.

c. The final determination of valves and location shall be approved by the City.

4.2.5.2 A valve box or vault shall be provided for every valve installed below grade. The cover for all valve boxes and vaults placed in the street pavement or any location where there is vehicular traffic shall be traffic rated.

4.2.5.3 All valve box caps shall be marked with the word "WATER", or a "W".

4.2.5.4 All valve operating nuts shall be maximum 36” from finish grade.

4.2.6 Water Services

4.2.6.1 General:

a. Residential Developments: Water services for single-family developments shall consist of a single service.

b. Commercial / Industrial Developments: Water services for commercial or industrial uses may have multiple services subject to the approval of the City Engineer. Where property will be served by two or more water service connections from different street water mains or supplies, each service connection shall be equipped with an approved backflow prevention assembly to prevent cross connection flow.

c. Water services shall be in separated by a minimum distance of 2 feet.

4.2.6.2 Service Size:

a. Residential Developments: Water service connections shall not be less than 1-inch IPS size, with 1-inch meters.

b. Commercial / Industrial Developments: Water service connections shall be sized for the customer’s needs, and as approved by the City Engineer.

4.2.6.3 Location:

a. Residential Developments: Water services shall be located immediately behind the sidewalk, opposite of the driveway, and within two (2) feet of the property line.

b. Commercial / Industrial Developments: Water services shall be located behind the curb and gutter, as required by the developer and approved by the City Engineer.

c. Placement of water services boxes within pavement or finished concrete surfaces is prohibited.

4.2.7 Air and Vacuum Release Valves

4.2.7.1 Air and vacuum release valves shall be installed in the water system at all points air pockets may form, and as directed by the City Engineer.

4.2.7.2 The design shall be such as to ensure the release of air automatically from the water main. These valves shall also ensure the entrance of air into the water main when the pressure inside the line is below atmospheric pressure.

4.2.7.3 All valves shall be designed for a minimum of 150 psi operating pressure.

4.2.7.4 The inlet to each valve shall be provided with a gate valve or corporation stop to provide a positive closure between the main pipeline and the air and vacuum release valve.

4.2.8 Flushouts (Blowoffs)

4.2.8.1 A flushout (blowoff) shall be installed at the terminus of all dead-end water mains or non-circulating flow water mains.

4.2.8.2 All flushouts shall be a minimum outlet size of 2" and shall be designed for a minimum operating pressure of 150 psi. See Standard Detail 4.5 for sizing requirement.

4.2.8.3 A fire hydrant may be used in lieu of a flushout (blowoff) at the discretion of the City Engineer.

4.2.9 Fire Protection Requirements (Non-residential Properties)

4.2.9.1 Fire Department Connections shall be installed in accordance with the following:

a. The fire department connection (FDC) shall be within 25 feet of the curb line or fire lane of the street fronting the property. The location shall be as approved by the fire chief. An approved hydrant shall be located within 25 feet of a newly installed FDC.

b. The FDC may be installed on the downstream side of an aboveground backflow preventor assembly.

1) The backflow preventor must be installed parallel to the street or fire lane.

2) The fire hose connection on the FDC must be facing the street or fire lane.

3) In this configuration, the Outside Stem and Yoke (OS&Y) valves on the backflow preventor may be used as the control valves for sprinkler systems provided that the OS&Y valves are equipped with temper switches.

4) All fire sprinkler control valves shall be equipped with a tamper switch.

c. The FDC shall be arranged so that hose can be readily and conveniently attached to the inlet without interference (landscaping, buildings, fences, posts, etc.) The FDC shall be located a minimum of 4'0" from a Post Indicator Valve (PIV), or as required by Kern County Fire Department.

d. The 2 ½" connections on the FDC shall be located no less than 2'6" and no more than 4'0" above finished grade.

e. The size of the FDC piping and the number of 2 ½" connections shall be sufficient to supply the hydraulically calculated sprinkler water demand.

f. Each FDC shall be designated by a sign having raised letter at least 1" in cast on plate or fitting reading for service: e.g.- " AUTO SPRINKLER," "OPEN SPRINKLER", "STANDPIPE", or "AUTO SPRINKLER and STANDPIPE".

4.2.9.2 Class I Standpipe Systems

a. There shall be a Class I standpipe outlet connection starting at the 2nd floor and above the landing of every required stairway above grade and below grade on each side of the wall adjacent to the exit opening of a horizontal exit. Outlets at stairways shall be located within the exit enclosure or in the case of pressurized enclosures within the vestibule of exterior balcony giving access to the stairway.

b. Risers and laterals of a Class I Standpipe system not located within an enclosed stairway or pressurized enclosure shall be protected by a degree of fire resistance equal to that required to vertical enclosures in the building at which they are located.

c. Outlets shall consist of a gated 2½-inch connection with male National Standards threads with 2½-inch cap.

4.2.9.3 Backflow Prevention

Any connection between a building's fire sprinkler system and the City's water main shall be protected from backflow in accordance with the California Plumbing Code and the City's water requirements.

4.2.10 Cross-Connection Control Requirements

4.2.10.1 Cross-connections of any type that permit a backflow condition from any source or system other than that of the City's potable water mains are prohibited.

4.2.10.2 A connection constituting a potential or actual backflow hazard is not permissible unless a backflow prevention device or air gap, which is approved by the California State Department of Health Services and complies with requirements specified in the State Health and Safety Code, applicable sections of the National Fire Protection Association, and Title 17 of the California State Administrative Code, is installed. Such an installation

shall at all times be subject to inspection and regulation by the City for the purpose of avoiding possibility of backflow.

4.2.10.3 The City will not provide any water service to any premises or continue to serve water unless the public water supply is protected as required by state, county and City regulations.

4.2.10.4 Backflow preventive devices shall be approved by the City Backflow Prevention Officer and shall be installed by and maintained at the expense of the water user. Service of water to any premises may be discontinued by the City if:

a. A backflow prevention device required by the City is not installed.

b. If any defect is found in an installed backflow preventive device.

c. If it is found that a backflow preventive device has been removed or bypassed;

d. If unprotected cross-connections exist on the premises; and service will not be restored until such conditions or defects are corrected.

4.2.10.5 Additional reference for guidelines to when, why and what types of backflow and cross-connection control devices are approved may be found in:

a. State of California Government Code, Section 11000 Series.

b. State of California Health and Safety Code, Section 13000 Series.

c. Regulations Relating to Cross-Connections, California Administrative Code - Title 17 - Public Health.

d. Manual of Cross-Connection Control Procedures and Practices, State of California, Department of Health Services.

e. National Fire Protection Association (NFPA) Standards.

4.2.10.6 Water users which have multiple water systems shall abide by the requirements specified in Title 17 for marking safe and unsafe water lines, and have a designated water supervisor, if required by the City.

4.2.11 Requirements for Water/Sewer Separation

For water/sewer separation criteria, see Section 3.2.9.

4.2.12 Storage Facilities

4.2.12.1 All steel tanks, standpipes, reservoirs and elevated tanks for water storage shall comply with "AWWA D100 Standard for Welded Steel Tanks for Water Storage" or "AWWA D103 Standard for Factory Coated Bolted Steel Tanks for Water Storage," and also meet all foundation and seismic requirements of the Building Code. All pressure (hydromatic) tanks containing more than 1,000 U.S. gallons shall conform to the ASME Code for pressure storage and vessels.

4.2.12.2 All inspection, repairing, painting and repainting of steel tanks, standpipes, reservoirs, and elevated tanks for water storage shall comply with "AWWA D102."

4.3 MATERIAL STANDARDS

4.3.1 General

4.3.1.1 All material that is to become a permanent part of any water system shall conform to the requirements for the particular materials set forth in these Standards.

4.3.1.2 The contractor shall supply any and all certificates of compliance, certified test results or shall perform tests as required to assure the City Engineer that the material being incorporated into the work has met the requirements as specified.

4.3.1.3 Requests to use materials not listed in these standards shall require approval of the City Engineer. All such requests shall be made in writing separate from the plan submitted.

4.3.1.4 Material Tests

a. All tests to determine compliance with any of these specifications shall be made within the Continental United States.

b. If requested by the City Engineer, the test results shall be certified by a materials testing firm acceptable to the City Engineer. Test results shall be provided to the City Engineer.

c. Any materials delivered to the job site and suspected of damage shall be tested and the test results certified by a materials testing firm acceptable to the City Engineer.

4.3.2 Polyvinyl Chloride Pipe (PVC) and Fittings

4.3.2.1 Materials:

a. Pipe and fittings with nominal diameter of twelve (12) incest of less shall conform to AWWA-C-900, Class 150.

b. If larger diameter pipe is required, AWWA C905 PVC pipe may be used if approved in writing by the City.

c. Fittings shall be manufactured of ductile iron conforming to the requirements of AWWA C-110/C-153, 350 psi pressure rating. All fittings shall be factory cement-mortar lined in accordance with AWWA C-104.

d. Fittings shall be restrained mechanical joint for direct connection to the mating PVC pipe except when connecting to a valve. Valves and fittings shall be flanged together.

e. Flanges for fittings shall conform to the bolt circle and bolt hole dimensions for flanges in AWWA C-110. Gaskets for flanged joints shall be full face, cut from 1/8-inch thick rubber with bolt holes prepunched.

f. Nuts and bolts for bolting flanged joints shall be standard hexagonal head machine bolts and hexagonal nuts conforming to the requirements of ASTM A-307, Grad B. All buried flanged-end fittings shall be bolted with stainless steel nut and bolts. All bolts shall be lubricated with graphite and oil. Flanged faces shall be wire brushed and cleaned prior to joining each flange.

g. All buried fittings and valves shall be wrapped in polyethylene film as specified in Section 4.3.6.

h. Each standard length of PVC pipe and coupling if separate sleeve-type couplings are used, shall be marked with the nominal diameter, the OD base (cast iron pipe OD base is required), the material code (PVC 1120), the dimension ratio (DR) number, AWWA C900, pressure class, the manufacturer's name, and seal of the testing agency that verified the suitability of the pipe material for potable water service.

4.3.2.2 Material Handling

If pipe is stored at a project site, it shall not be stacked higher than four feet and no weight shall be placed on bells or couplings. Stored pipe shall be covered to protect it from ultraviolet light (sun's rays). PVC pipe with noticeable color changes resulting from exposure to ultraviolet light may be rejected at the discretion of the City.

4.3.2.3 Joints:

a. Only elastomeric gasket jointed PVC pipe shall be used. Either the integral bell design or the separate sleeve-type coupling joint may be used.

b. Gaskets shall meet the requirements of AWWA C900, or C905, as appropriate. Oil resistant gaskets may be required in some instances by the City.

c. PVC pipe may not be used in areas subject to contamination by petroleum distillates.

4.3.3 Ductile Iron Pipe and Fittings

4.3.3.1 Materials

a. Ductile iron pipe shall be designed in accordance with the latest revision of ANSI/AWWA C150/A21.50 for a minimum 150 psi rated working pressure plus a 100 psi surge allowance.

b. Ductile iron pipe shall be manufactured in accordance with the latest revision of ANSI/AWWA C151/A21.51. Each pipe shall be subjected to a hydrostatic pressure test of at least 350 psi at the point of manufacture.

c. The class or nominal thickness, net weight without lining, and casting period shall be clearly marked on each length of pipe. Additionally, the manufacturer's mark, country where cast, year in which the pipe was produced, the letters "DI", and "WATER" shall be cast or stamped on the pipe.

4.3.3.2 Fittings

a. Fittings shall be manufactured of ductile iron conforming to the requirements of AWWA C-110/C-153 with a 350 psi pressure rating. All fittings shall be factory cement-mortar lined in accordance with AWWA C-104.

b. Fitting ends shall be selected to match the end of the pipe joint, valve, or fitting to which it is to be joined. Requirements for fitting end configurations are outlined in AWWA C-110 and C-111. Fittings shall be flanged to valves.

c. Gaskets for mechanical joints shall conform to the requirements of AWWA C-111 with duck tips and backs.

d. Gaskets for flange joints shall be rubber, full face, bolt holes prepunched, and 1/8-inch thick conforming to the dimensions for flanges in AWWA C-110.

4.3.3.3 Joints:

a. Mechanical joints and push-on joints shall conform to the requirements of AWWA C-111.

b. Flanged joints shall conform to AWWA C-115, if flanges are threaded, or to the flanged joint provisions of AWWA C-110 if flanges are cast integrally with the pipe. Threaded flanges are to be used only on pipe spools shorter than a standard length of ductile iron pipe (18 feet or 20 feet) needed in special circumstances as approved by the City.

4.3.3.4 Linings and Coatings:

a. Ductile iron pipe shall be provided a standard asphaltic exterior coating in conformance with ANSI/AWWA C110/A21.10.

b. All ductile iron pipe shall be polyethylene encased per ANSI/AWWA C105/A21.5 and Section 4.3.6.

c. Interior lining shall be required for all ductile iron pipe used for water.

d. Cement-mortar lining shall be per ANSI/AWWA C104/A21.4, of latest revision.

4.3.4 Steel Pipe and Fittings

4.3.4.1 General Requirements

The use of steel pipe below ground shall be restricted to special circumstances such as multiple changes in direction over a short run of pipe, or as required by the City Engineer. Steel pipe shall be used for all above ground installations.

4.3.4.2 Materials

a. Steel pipe shall be designed in accordance with the latest revision of AWWA C200 for a minimum 150 psi rated working pressure plus a 100 psi surge allowance.

b. Steel pipe shall be ASTM A53, Types E or S, Grade B, and shall conform to the following dimensions:

Nominal Pipe Size (Inches)	Pipe O.D. (Inches)	Wall Thickness (Inches)
6	6.625	0.25
8	8.625	0.25
10	10.625	0.25
12	12.75	0.25
14	14	0.25

4.3.4.3 Joints

a. Welding and welded joints shall be done in accordance with AWWA C206.

b. All welds shall be full penetration welds. All other joint welding procedures to be used for work shall comply with Section 3, AWWA C206.

c. Provide plain end pipe where flexible pipe couplings are to be provided.

4.3.4.4 Flanged Connections:

a. Carbon steel ring flanges shall conform to AWWA C207, Class D for 150 - 175 psi working pressure. Raised face, slip on flanges shall be installed. Bolt holes shall straddle the vertical center line of the pipe. Facing and drilling shall conform to Section 3 of AWWA C207. Welded flanges shall be attached to pipe, fittings, or other appurtenances by means of two fillet welds of thickness equal to the pipe thickness.

b. Bolts and nuts for above ground connections shall be carbon steel ASTM 307, grades A or B, electroplated for corrosion protection.

c. Bolts and nuts for below ground connections shall be Type 304 stainless steel with a minimal tensile strength of 60 ksi.

d. Provide washers for each nut and bolt. Washers shall be of the same material as the nuts.

e. Bolts and nuts shall have regular hexagonal heads in accordance with ANSI B18.2.1 for wrench head bolts and nuts and wrench opening. All bolts shall be threaded in accordance with ANSI B1.1 for screw threads, coarse threaded series, Class 2A and 2B fit. Minimum bolt lengths shall be the sum of the mating flange thicknesses, the gasket, the washer thicknesses and the depth of the nut plus 1/8 inch before applying torque.

f. Stainless steel bolts and nuts shall be lubricated with a chloride free lubricant.

g. Gaskets shall extend from the inside diameter of the flange to the least inside edge of the bolt holes or may extend beyond the bolt circle to the outside diameter of the flange. Gaskets shall be 1/8 inch thick. Gaskets between flanges shall be constructed of non-asbestos type material.

4.3.4.5 Steel Flexible Pipe Couplings

a. Steel couplings shall have center sleeves and end rings made of steel conforming to AWWA C219, Section 4. Minimum center sleeve length shall be 5 inches for pipe sizes 3/4 inch through 4-1/2 inches, 7 inches for pipe sizes 5 inches through 24 inches, and 10 inches for pipe sizes larger than 24 inches.

b. Sleeve bolts in exposed service shall be carbon steel per AWWA C219, Section 4. Sleeve bolts in buried or submerged service shall be Type 316 stainless steel per AWWA C219, Section 4.

c. Steel end rings shall be cast, forged, or hot rolled in one piece. Do not use rings fabricated from two or more shapes.

d. Wall thickness of sleeve shall be at least that specified for the size of pipe in which the coupling is to be used.

e. Flexible pipe couplings for plain-end steel pipe shall be steel, Dresser Style 38, Smith-Blair Type 411, Baker Series 200, or equal.

4.3.4.6 Transition Couplings

Couplings for connecting different pipes having different outside diameters shall be steel and conform to the requirements of AWWA C219. Couplings shall be: Dresser Style 62 or 162, Smith-Blair Series 413, Baker Series 212 or 220, or equal. Couplings shall have an internal full circumference ring pipe stop at the midpoint of the coupling. Inside diameter of coupling pipe stop shall equal diameter of smaller diameter pipe.

4.3.4.7 Flanged Coupling Adapters for Steel Pipe

Flanged Coupling Adapters for steel pipes shall be steel and conform to the requirements of AWWA C219. Flanges shall conform to the requirements of AWWA C207. Adapters shall be: Dresser Style 128, Smith-Blair Type 913, or equal. Flange ends shall match the flange of the connecting pipe.

4.3.4.8 Lining and Coating:

a. All steel pipe shall be fusion bonded epoxy lined and coated in accordance with AWWA C213, minimum thickness 20 mils. All application and curing shall conform to manufacturer's specifications.

b. Overcoat all above ground steel pipe with acrylic enamel having a minimum volume of solids of 35%.

c. Coat buried flexible pipe couplings, transition couplings, and flanged coupling adapters with high solids epoxy or phenolic epoxy having minimum volume of solids of 80% (ASTM D2697). Coat buried bolt threads, tie bolt threads, and nuts with corrosion resistant grease to a thickness of ¼ inch or as determined by the coating manufactures. Then wrap the couplings with polyethylene per Section 4.3.6.

d. Coat flexible pipe couplings, transition couplings, and flanged coupling adapters located indoors, in vaults and structures, and above ground with the same coating system as specified for the adjacent pipe.

e. Alternatively, line and coat pipe couplings with fusion-bonded epoxy.

4.3.5 Valves

4.3.5.1 Resilient-Seated Gate Valves shall be cast-iron body, all bronze mounted interior with modified wedge disc or parallel faced disc with replaceable resilient seats. The bronze stem nut shall be solid bronze conforming to ASTM B-62 (4-6% zinc). The bronze stem

shall be cast bronze or forged bronze bar stock containing a maximum of 2% zinc. Valves shall be manufactured by Mueller, Clow, or approved equal.

4.3.5.2 Valves shall be non-rising stem, counterclockwise opening for cold water service of 200 PSI working water pressure and shall meet or exceed the standards in accordance with "AWWA C509", as last revised.

4.3.5.3 Resilient seat gate valves, unless otherwise indicated, shall be the same size as the main in which they are installed and shall be flange connected to fittings. Valves shall be flange by restrained mechanical joint when connecting to a fitting or restrained mechanical joint by restrained mechanical joint when in line.

4.3.5.4 Flanged valves with stainless steel bolts are to have 2-inch-square cast-iron operating nuts. Valves shall be marked with raised lettering cast on the b o d y indicating manufacture and working pressure.

4.3.5.5 The interior of the valve body and wedge shall be coated at the place of manufacture. Surfaces shall be sandblasted in accordance with SSPC-SP-5 (white metal blast cleaning). Interior coating shall consist of two coats of epoxy resin, Keysite 740 or equal, applied to a minimum dry-film thickness of 10 mils.

4.3.5.6 For buried service, valve bodies and cast-iron portions of the operator housings and extensions shall be coated at the place of manufacture. Surfaces shall be sandblasted in accordance with SSPC-SP-6 (commercial blast cleaning). One coat of heavy-duty coal-tar (Koppers Bitumastic 505 or approved equal) shall be applied to a minimum dry-film thickness of 15 mils. The paint manufacturer's application recommendations shall be followed.

4.3.5.7 All buried flanged-end fittings shall be bolted with stainless steel nuts, washers, and bolts. Washers shall be installed on both sides of the flange with each bolt and nut. All bolt threads shall be lubricated with graphite and oil prior to installation. Flange faces shall be wire brushed and cleaned prior to joining each flange.

4.3.5.8 Gaskets for flanged-end resilient seat gate valves shall be full face, 1/8-inch rubber with prepunched bolt holes.

4.3.5.9 Valve ends shall be flange or restrained mechanical joint. Where flanged end valves are used, the flanges shall conform to the bolt circle and bolt hole dimensions for flanges in AWWA C-110.

4.3.6 Plastic Film Wrap

4.3.6.1 General

Polyethylene plastic film wrap shall be placed around ductile iron pipe and all valves, flanges, and other fittings when buried underground.

4.3.6.2 Materials

a. The polyethylene film shall be of virgin polyethylene and shall meet the requirements of ASTM D-1248 for Type I, Class A, Grade E-1, and shall have a flow rate not exceeding 0.4 grams/minute per ASTM D-1238.

b. The polyethylene film shall be 10 mils in thickness. The length shall be sufficient to firmly attach the film to the pipe on either side of the valve, flange, or fitting. The following minimum flat sheet widths shall be used for the specified valve sizes:

Nominal Fitting Size (Inches)	Minimum Flat Sheet Width (Inches)
4	24
6	24
8	24
10	30
12	36
16	48
18	48
20	48
24	48

c. Tubular material, cut on one side to fold out to the required width may be used.

d. Tape for securing the polyethylene wrap shall be 2-inch-wide adhesive tape, such as Polyken 900 (polyethylene), Scotchrap 5 (polyvinyl), or approved equal. The tape shall be such that the adhesive will bond securely to both metal surfaces and polyethylene film.

4.3.6.3 Installation

Valves, flanges, or fittings shall be wrapped by passing the flat sheet of film under the valve bottom and bringing the ends up around the body and securing it in place with 2-inch wide strips of plastic adhesive tape. The polyethylene shall be secured around the valve stem in such a manner as to leave the stem free to operate. The film shall be brought completely around the flanges and secured to the pipe with plastic adhesive tape on either side of the valve, flange, or fitting.

4.3.7 Water Service Connections

4.3.7.1 All threads for underground service line fittings and materials for these fittings, corporation and meter stops, shall comply with AWWA C-800 or latest version and be lead free.

4.3.7.2 Water Service Pipe and Tubing:

a. All materials shall conform to IAPMO IS 7-90 "Installation Standard for Polyethylene (PE) Cold Water Building Supply and Yard Piping" in the current adopted edition of the California Plumbing Code.

b. Water services shall be polyethylene (PE) tubing, IP sizes, and conforming to AWWA C900 Appendix A, ASTM 2737, Grade 34, SDR 9. Water service size shall match water meter size.

c. PE tubing shall be connected to bronze fittings with a James Jones J-2805 insert liner.

4.3.7.3 Corporation Stops:

Corporation stops shall be I.P x I.P lead free bronze conforming to the requirements of the most recent revision of AWWA C-800. Corporation stops shall be manufactured by Mueller Insta-tite.

4.3.7.4 Meter Stops:

Meter Stops shall be I.P. x I.P. lead free bronze conforming to the requirements of the most recent version of AWWA C-800. Meter stops shall be manufactured by Mueller Insta-tite.

4.3.7.5 Service Fittings:

All service fittings shall be I.P. x. I.P. lead free bronze conforming to the requirements of the most recent version of AWWA C-800. Service fittings shall be manufactured by Mueller Insta-tite. No compression joints will be allowed.

4.3.7.6 Service Saddles:

Service saddles shall be lead free bronze double strap with iron pipe thread tap conforming to the requirements of the most recent version of AWWA C-800. Service saddles shall be manufactured by Mueller, James Jones, or equal.

4.3.7.7 Water Meter:

All water meters up to and including 2 inches in size shall be supplied and installed by the City. Any meter larger than 2-inch diameter shall be supplied and installed by contractor and approved by City Engineer.

4.3.8 Fire Hydrant Assembly

4.3.8.1 Hydrants shall conform to AWWA C-502 (dry barrel) with frangible section near ground line, shall have two 2 ½ inch and one 4 ½ -inch national standard threaded

connections, and be painted John Deere Yellow. Hydrants shall be Mueller-brand Model F-21, or approved equal.

4.3.8.2 Bury for hydrants shall conform to AWWA C-502, height to be sufficient to insure 36-inches minimum cover over hydrant rim. Bury to be coated with coal tar enamel or coal tar epoxy.

4.3.8.3 Barricades shall be installed where considered necessary by the City Engineer and Kern County Fire Department to protect fire hydrants. Fire hydrant barricades shall not obstruct the outlets and shall consist of 4-inch diameter standard steel pipe filled with concrete, extending 3-foot above and 3-foot below ground and imbedded in concrete 12-inches in diameter and 3-foot 4-inches deep. All steel pipe above ground shall be painted with a minimum of two (2) coats of primer and a finish coat of John Deere Yellow.

4.3.9 Miscellaneous Hardware

4.3.9.1 Bronze Gate Valves: All 1 ½ inch through 3 inch gate valves shall be all bronze and comply with "AWWA C500" and ASTM standards and be lead free. The valve shall be opened with either a handwheel for above ground valves or 2 inch square key for below ground valves.

4.3.9.2 Standard Service Seal Clamps: All Service clamps and straps shall conform to AWWA Standards, be approved for use by the City Engineer, and installed in accordance with the manufacturer's recommendations.

4.3.9.3 Repair Service Clamp: A long-body service clamp shall be used for repair to contractor-damaged pipelines, as approved by the City Engineer.

4.4 CONSTRUCTION STANDARDS

4.4.1 Connection to Existing Water Line

4.4.1.1 Where new water mains are to be connected to the City's existing water system, the tie-in location and hardware must be as approved by the City Engineer.

4.4.1.2 The contractor shall exercise proper care in the construction of the tie-in so as not to contaminate the existing water system.

4.4.1.3 Charging the new water system with the City's system pressure must be done in the presence of the City Engineer.

4.4.1.4 Whenever the location of existing mains makes it necessary to use a gradual transition on the alignment of the proposed mains, said gradual transition shall be made in the shortest practical distance with the maximum deflection per joint for curves not to exceed the pipe manufacturer's recommendations, or 5 degrees, whichever is lesser.

4.4.1.5 All tie-ins, taps, saddle and connection to existing mains must be made in the presence of an authorized City representative.

4.4.2 Material Handling

4.4.2.1 All pipe material shall be handled, laid, blocked and joined in accordance with the manufacturer's recommendations and as specified in these standards.

4.4.2.2 All open ends of all water mains being installed shall be properly covered at the end of each day's work to prevent entry of foreign matter, animals, debris, or children.

4.4.2.3 PVC pipe shall be stored on a smooth bed. The pipe shall not be dropped or dragged. Stored pipe shall be covered to protect it from ultraviolet light (sun's rays). PVC pipe with noticeable color changes resulting from exposure to ultraviolet light shall be rejected.

4.4.3 Thrust Devices

4.4.3.1 Thrust restraint for DIP and steel pipe may be provided by the use of concrete thrust blocks or joint restraint devices.

4.4.3.2 Joint restraint devices shall be mechanical joints with retainer glands.

4.4.3.3 If restrained joints are to be used, the Developer shall submit to the City for review and approval information on the type of joint proposed along with calculations for the number of joints of DIP or steel pipe to be restrained on each side of a fitting or valve.

4.4.3.4 If concrete thrust blocks are to be used, they shall be installed at all fittings (including tees, crosses, reducers, elbows, end caps or plugs), inline valves, fire hydrants, and any other location deemed necessary by the City.

4.4.3.5 Thrust blocks shall be constructed of Class "B" concrete as specified in Section 5.6.1 and placed between the fitting to be anchored and undisturbed earth. The bearing area against undisturbed earth shall be as shown in the Standard Details. The concrete shall be placed so that pipe joints and fittings will be accessible for repairs.

4.4.3.6 The requirement for thrust blocks may be waived by the City if fittings are flanged to pipe or other restraint-type joints are used.

4.4.3.7 Bag concrete will not be accepted. Concrete used shall be supplied in such a way to verify compliance with Note 4.4.3.5.

4.4.4 Installation of Water Pipe and Fittings

4.4.4.1 Pipe shall be laid to plan with uniform bearing under the full length of the barrel of the pipe. Suitable excavation shall be made to receive the socket or bell, which shall not bear upon the subgrade or bedding.

4.4.4.2 Installation of fittings shall be in accordance with manufacturer’s recommendations.

4.4.4.3 Thrust restraint devices & thrust blocks will be installed prior to trench backfill.

4.4.4.4 Curved alignments for ductile iron pipe are allowable without the need for fittings provided the maximum deflection at any pipe joint does not exceed the manufacturer's recommendations, or 5 degrees, whichever is lesser for pipe equal to or less than 12-inches in diameter. Deflecting pipe joints is allowable only for push-on or mechanical jointed pipe.

4.4.4.5 Special Conditions for PVC Water Pipe:

a. Unless a separate sleeve-type coupling jointed pipe is used, the manufacturer of which recommends deflecting pipe at the joints to follow a curved alignment, deviations from a straight pipeline alignment shall be made only by use of fittings or by bending the pipe. If pipe is bent, it shall be done in such a manner as to not deflect pipe at a joint. The minimum allowable radii, if changes in direction are to be made by bending pipe, are as shown below:

Pipe Size	Minimum Allowable Radii
6 Inch	150 Feet
8 Inch	200 Feet
10 Inch	250 Feet
12 Inch	300 Feet

b. Fittings shall be supported independently of the pipe. Five-foot lengths of pipe shall be used in and out of each fitting and valve and wherever pipe passes through a rigid structure.

4.4.4.6 Special Conditions for Steel Pipe:

a. Beveled ends for butt-welding shall conform to ASME B16.25. Remove slag by chipping or grinding. Surfaces shall be clean of paint, oil, rust, scale, slag, and other material detrimental to welding. When welding the reverse side, chip out slag before welding.

b. Fabrication shall comply with ASME B31.3, Chapter V. Welding procedure and performance qualifications shall be in accordance with Section IX, Articles II and III, respectively, of the ASME Boiler and Pressure Vessel Code.

c. The minimum number of passes for welded joints shall be as follows:

Steel Cylinder Thickness (inch)	Minimum Number of Passes for Welds
Less than 0.1875	1
0.1875 through 0.25	2
Greater than 0.25	3

d. Welds shall be full penetration.

e. Use the shielded metal arc welding (SMAW) submerged arc welding (SAW), flux-cored arc welding (FCAW), or gas-metal arc welding (GMAW) process for shop welding. Use the SMAW process for field welding.

f. Welding preparation shall comply with ASME B31.3, paragraph 328.4. Limitations on imperfections in welds shall conform to the requirements in ASME B31.3, Table 341.3.2 and paragraph 341.4 for visual examination.

g. Identify welds in accordance with ASME B31.3, paragraph 328.5.

h. Clean each layer of deposited weld metal prior to depositing the next layer of weld metal, including the final pass, by a power-driven wire brush.

i. Welding electrodes shall comply with AWS A5.1, A5.17, A5.18, A5.20, or A5.23. Carbon steel flux cored wire shall have a maximum boron content of 0.003%.

4.4.4.7 Field Thickness Measurement of Paint Linings and Coatings for Steel Pipe

a. Test linings and coatings per ASTM G62, Method B, with a holiday detector set at 125 volts per mil coating thickness. Repair holidays and pinholes by applying the prime, intermediate, and finish coatings to each holiday or pinhole and retest. Provide a certification from the applicator confirming that the testing was performed and that any and all repairs required were performed.

b. Measure the lining and coating thickness on each pipe section using a calibrated coating thickness gauge. Make five separate spot measurements (average of three readings) spaced evenly over every 15 linear feet (or fraction thereof) to be measured. Make three gauge readings for each spot measurement of either the substrate or the paint. Move the probe a distance of 1 to 3 inches for each new gauge reading. Discard any unusually high or low gauge reading that cannot be repeated consistently. Take the average (mean) of the three gauge readings as the spot measurement. The average of five spot measurements for each area shall not be less than the specified thickness. No single spot measurement in any area shall be less than 80%, or more than 120%, of the specified thickness. One of three readings that are averaged to produce each spot measurement may underrun by a greater amount. If a section of the pipe, item, or piece of equipment does not meet these criteria, remove the entire lining or coating and recoat the entire item or piece of equipment.

c. Thickness determination shall meet the following requirements:

1) No individual reading shall be below 75% of specified thickness.

2) Individual spot readings (consisting of three point measurements within 3 inches of each other) shall have an average not less than 80% of specified thickness.

3) The average of all spot readings shall be equal to or greater than nominal thickness specified.

4) Thickness determinations shall be conducted using a Type 1 magnetic thickness gauge as described in SSPC PA2 specification.

5) If the item has an insufficient film thickness, clean and topcoat the surface with the specified finish coatings to obtain the specified coverage. Sandblast or power-sand visible areas of chipped, peeled, or abraded coating feathering the edges. Then coat in accordance with the manufacturer recommendations. Work shall be free of runs, bridges, shiners, laps, or other imperfections.

4.4.5 Pipeline Testing

4.4.5.1 All installed water pipe shall be tested in accordance with the following standards, the recommendations of the manufacturer, and as acceptable to the City Engineer.

4.4.5.2 The Office of the City Engineer shall be given at least two business days notice prior to testing or inspection.

4.4.5.3 All tests shall be made in the presence of the City Engineer.

4.4.5.4 All new water mains shall be pressure tested following the placement of any new fire hydrants in their final location and prior to pipeline and connection disinfection.

4.4.5.5 Pressure / Leakage Testing:

a. Distribution mains shall be tested for leakage in conformance with “AWWA Manual of Water Supply Practices M23, PVC Pipe - Design and Installation” and this section.

b. All pipe shall be filled with potable water for at least 24 hours before applying the hydrostatic test pressure, and entrapped air shall be bled off.

c. The Developer shall provide suitable calibrated tanks for measurement of leakage and shall furnish the necessary bulkheads, piping, calibrated gauges, pumps, power, labor and other means, and shall do everything necessary for filling the pipeline and for obtaining and maintaining the required water pressure.

d. Water mains shall be brought to a hydrostatic test pressure of 150 PSIG. The minimum duration of the test shall be four hours.

e. At the conclusion of the 4 hours, the test pressure shall be restored and all water used during the tests shall be accurately measured to determine the actual leakage.

f. For all types of water mains, there shall be no visible leakage at any joint or section of pipe and the allowable leakage for the total lengths of all water mains under test shall not exceed 10 gallons per day per inch diameter per mile for pipe.

g. If the tested pipe exceeds the allowable leakage, the pipe must be uncovered, repaired, and tested until it meets the allowable leakage, at the contractor's expense.

4.4.5.6 Disinfection:

a. All disinfection, as outlined below, is to be performed under the direct supervision of a person holding a valid T-2 grade water treatment license from the California Department of Health Services.

b. All new or repaired water mains, pumps, tanks, wells, and other facilities before being placed in service, shall be completely disinfected in accordance with "Procedures for Disinfecting Water Mains, AWWA C601" and any additional requirements, as required by the State Department of Health Services.

c. Contractor to ensure highly chlorinated water does not backflow into the public water supply.

d. Water used for testing shall be potable water.

e. Chlorine residual shall be determined in accordance with the method specified in the Appendix A to AWWA C-601 with amounts of sufficient chlorine to produce a dosage of 40-50 ppm and a free chlorine residual of not less than 5 ppm after a 24 hour period has elapsed.

f. During the chlorination process, all valves and accessories shall be operated. After chlorination, the water shall be flushed at a rate of 2.5 feet per second from the line at is extremities until the replacement water tests are equal, chemically and bacteriologically, to those of the permanent supply.

g. Following the flushing of new water lines, the developer shall retain an independent qualified laboratory (as approved by the City) to perform bacteriological tests. Such tests shall meet the California Department of Health Services requirements for domestic water systems. The cost of the initial and any subsequent test(s) shall be paid by the developer. Certified copies of the bacteriological test(s) shall be submitted to the City prior to final acceptance of the new water lines. Bacteriological test(s) shall be performed by the Presence/Absence Method. Collect two samples for each tie in location, plus one sample for each 1,200 feet of pipeline, and at least one sample from each branch per AWWA C651, Section 5.1 and deliver to a certified laboratory within six hours of obtaining the samples.

4.5 ACCEPTANCE

4.5.1 General

4.5.1.1 Prior to Acceptance of any water system improvements by the City, the Contractor shall clean and test all lines in the presence of City inspector.

4.5.1.2 All cleaning and testing of water lines shall take place after all construction work is completed up to, but not including, final paving.

4.5.1.3 The system will be inspected after final paving is completed and any damage to the system during final paving and cleanup will be corrected before final approval.

4.5.2 Testing

All installed water pipe shall be tested in accordance with these standards, the recommendations of the manufacturer, and as acceptable to the City Engineer. All required test results must be submitted to the City prior to final acceptance.

4.6 PIPELINE AND TRENCH EARTHWORK

Refer to Section 3.6.

4.7 SPECIAL CONSTRUCTION REQUIREMENTS (STEEL CASING)

Refer to Section 3.7 for steel casing requirements.

4.8 SAMPLE GENERAL NOTES

General Notes

General notes shall include all necessary notes to convey the intent of the City's drainage and grading standards, the project at hand, and as directed by the City Engineer. They shall include, but not be limited to the following.

1. 48 hour inspection notice - Prior to the start of any phase of construction, the Office of the City Engineer shall be given at least 48 hours notice.

2. Contractor shall call Underground Service Alert (USA) and the City of Tehachapi Department of Public Works at least two (2) working days prior to the start of construction to mark the locations of existing utility lines.

3. Contractor shall obtain all necessary permits before start of construction. A permit shall be obtained from the City for all work to be performed in City right-of-way.

4. The locations of existing utilities and underground pipelines shown on these plans are approximate only. The contractor shall determine the exact location of all existing utilities and underground pipelines before commencing work. Contractor assumes all liability for any and all damages to existing utilities occasioned by his failure to exactly locate, preserve, and protect any and all underground utilities and pipelines.

5. Contractor agrees that they shall assume sole and complete responsibility for job site conditions during the course of construction of this project, including the safety of all persons and property; that this requirement shall apply continuously and not be limited to normal working hours; that the contractor shall defend, indemnify, and hold the Developer, Design Engineer, and the City harmless from any and all liability, real or alleged, in connection with the performance of work on this project, excepting the liability arising from the sole negligence of the Developer, Design Engineer, or City.

6. All construction work shall be performed in accordance with City of Tehachapi Subdivision and Development Standards, the recommendations contained in the preliminary soils report for the development, and as directed by the Design Engineer and approved by the City Engineer.

7. The Contractor shall provide the Design Engineer with "As-built" plans upon completion of the work. The cost thereof shall be paid by the Contractor. No building permit will be issued by the City of Tehachapi until such a time as the finished grading has been certified by the Design Engineer and "As-built" plans submitted to the City of Tehachapi Engineering Department.

8. Approval of these plans does not relieve the Developer of responsibility for correction of mistakes, errors or omissions by same. If during the course of construction of these improvements, public interest requires a modification or departure from the City's Specifications, Details, or these Improvement Plans, the City Engineer shall have authority to require in writing such modification or departure and specify the manner in which the same is done.

9. The design engineer shall exercise sufficient supervisory control during construction to ensure compliance with the plans, specifications, and codes within his purview.

Sample Standard Water Notes

1. General: Contractor will furnish all materials, tools, labor, equipment and supervision necessary to complete installation and testing of water improvements as shown on the approved plans and specifications.

2. All work and materials shall be in full accordance with City of Tehachapi Standards, AWWA Standards, and State Standard Specifications. Nothing in the plans or specifications are construed to permit work not conforming to these Standards. Where work of a higher degree is indicated on the plans or specifications, that requirement shall govern.

3. All water mains shall be installed so that the top of the pipe is not less than 36" below finished paving of the street for water mains less than 12 inches in diameter unless a greater minimum depth is specified in the excavation and/or encroachment permit. All water service connections shall be installed with a minimum of 30-inch cover within the roadway.

4. All PVC pipe shall be installed in conformance with AWWA Specifications C-603 and couplings shall not rest on solid or original trench bottom.

5. Concrete thrust blocks shall be installed at all changes in direction (as at tees and elbows), changes in size (as at reducers), dead ends, fire hydrants and other valves where thrusts may normally be developed.

6. The pipe shall be installed so that it has a uniform bedding throughout its entire length.

7. Compaction requirements: dedicated streets: All pipeline trenches shall be backfilled and compacted in accordance with the specifications of the City of Tehachapi.

8. No valve covers or meter boxes are to lie in sidewalks, gross gutter, curb or driveways.

9. The Kern County Fire Department requirements shall be met.

10. Testing

    a. Immediately after the water line is completed, the contractor shall test the water line for leakage in accordance with City specifications in the presence of the city inspector. Any pipe or fittings that fail to pass the maximum allowable leakage requirements shall be removed and replaced with new materials at the expense of the contractor.

    b. The lines shall be tested to a pressure of 150 psi. The contractor shall provide all labor and materials required for the test.

11. Disinfection

    a. Disinfection of the water line shall be performed by the Contractor in accordance with AWWA C-651. The work shall be performed after all pressure and leakage tests are completed.

    b. The disinfecting agent shall be liquid chlorine fed through a mixing equipment which gasifies and dissolves the chlorine in water in strong solution and delivers the solution immediately into the pipe line being treated.

    c. The work shall be supervised by a competent person as defined by City Standards as experienced in the process, who shall use an approved chlorine test comparator with standardized orthotolidene solution for making the tests.

    d. The contractor shall furnish all necessary water, chemicals, equipment and personnel.

    e. After completion of the application, the pipelines shall remain closed for 24 hours. Samples shall then be taken at the same points as before and shall show no less than 10 parts per million available chlorine by weight; failing which, additional disinfection shall be effected as directed. Chlorine shall be added to the new line at the upper end. If the chlorine residual drops below 25 parts per million in any portion of the line, additional chlorine shall be added in that vicinity.

    f. After the 24-hour sterilization period, the line shall be thoroughly flushed to remove all strongly chlorinated water samples taken at various points, as directed, test not in excess of 2.0 part per million.

g. Care shall be taken to prevent strong chlorine solution in the line being treated from flowing back into the existing system.

h. During the process of chlorinating the pipe line, all valves and other devices shall be operated while the pipe line is filled with the heavily chlorinated water.

DIVISION FIVE
STANDARDS FOR STREETS

5.1 STANDARDS FOR STREETS

5.1.1 General

Street improvements shall include, but not be limited to, right-of-way (ROW) excavation, placing of asphalt concrete (AC) pavement and aggregate base (AB) material within the roadway, construction of concrete curb and gutter, sidewalk, driveway approaches, cross-gutters, and wheelchair ramps, installation of survey monuments and street and stop signs, adjustment of existing manholes and water valve boxes, and street lighting.

5.1.2 Purpose and Scope

This division establishes the minimum acceptable standards for the design of roadway systems and related infrastructure within new developments in the City of Tehachapi.

5.1.3 Waiver of Review Process

There are no provisions for the waiver of the review process for street improvement plans.

5.1.4 Enforcement

Provisions of these standards for streets and traffic circulation shall be enforced by the City Engineer.

5.1.5 State Specifications, California

Wherever reference is made to the State Specifications, such reference shall mean the State of California, Business, Transportation, and Housing Agency, Department of Transportation Standard Specifications, current edition.

5.2 STREETS AND TRAFFIC CIRCULATION - GENERAL POLICY

5.2.1 Street Improvement Requirements for Developments

5.2.1.1 Developments shall be subject to the following improvement requirements;

a. For incomplete streets bordering a particular development, all earthwork and improvements for the half ROW plus 10 feet adjacent to the subdivision shall be constructed.

b. For streets bordering a particular subdivision, all earthwork and improvements for the half ROW plus 10 feet adjacent to the subdivision shall be constructed.

c. All underground utilities within street ROW shall be installed prior to construction of any street improvements. Said utilities shall be installed in place complete including backfill, compaction, and any testing which may be required for the utility.

d. Concrete Curb and Gutters, Sidewalks and Drive Approaches are required on all streets and highways unless specified otherwise within these standards.

e. Expanded Intersections shall be provided for arterials and collectors in conformance with the City Standards, and as directed by the City Engineer.

f. Parkway Landscaping and community theme walls with pilasters shall be required along all arterials, as required by the Planning Commission.

g. Median Islands, including landscaping, may be as required by the Planning Commission for major arterials.

h. Street Lighting shall be required on all public streets as directed in Section 5.3.16 and by the City Engineer.

i. Open cutting of newly constructed or rehabilitated roads shall be prohibited unless otherwise authorized by the City. The words “newly constructed” shall include all those street improvements which are not older than 3 years.

j. Open cutting of all other roads shall be as permitted by the City. If open cutting is allowed, the Owner / Developer shall saw-cut clean lines, grind, and overlay AC pavement in accordance with the City’s Standard Detail 5.5.

k. If the traffic index rises on a particular existing street(s) bordering non-residential site development as a result of the development, the developer shall be responsible for improving the roadway structural section to accommodate the additional traffic impact. The entire roadway width is subject to this condition.

5.2.2 Traffic Impact Studies

Traffic Impact Studies shall be performed as determined by the Community Development Director.

5.2.3 Traffic Impact Fees

Traffic impact fees for new developments shall be paid in accordance with the City’s adopted fee schedule or as determined through a project specific traffic study. Said fee shall be paid at the issuance of a building permit.

5.2.4 Design of Street Systems

5.2.4.1 The design of street systems, including right-of-way ROW widths and improvement widths shall provide:

a. Adequate local service systems for the area being developed.

b. Consistency with adopted General Plans and Specific Plans.

c. Adequate capacity for the development of adjacent lands.

d. Line of Sight for vehicular traffic, including easements to maintain line of sight corridors.

e. Conformance to the Drainage Plan for the Development.

f. Expanded ROW and paving widths at intersections with city streets, or as may be required at intersections with state or county owned streets or highways, or as shown on the City General Plan or Specific Plans, or as required by the City Engineer.

5.2.4.2 The design of local streets providing access to residential properties shall also address the following additional concerns:

a. Minimize traffic passing through the residential area.

b. Discourage excessive speeds by increasing turning movements and decreasing block lengths.

5.2.5 Major and Minor Arterial Alignment within Developments

5.2.5.1 In the case of an arterial, major or minor, with an alignment lying within the development, the improvements thereof shall be subject to the following provisions:

a. The Developer shall furnish all of the necessary ROW.

b. The Developer shall complete all earth work, excavations, culverts and bridges, concrete curbs, gutters and sidewalks, base and paving to ultimate full width for the arterial, including raised median where required, as provided by these City Standards.

c. Half medians shall not be constructed. Developer shall enter into a separate agreement with the City for the ultimate development of the full center median where necessary.

5.2.6 Development Boundary, Widening and Improvement of Existing Streets

Where a new development occurs on land abutting an existing substandard street, the developer shall dedicate any necessary additional ROW as required by the General Plan and improve such street to conform to these policies and City Standards.

5.2.7 Access Roads

5.2.7.1 General Requirements:

a. In the case of an access road (or roads) for the development not subject to the provisions of Section 5.2.4, the Developer shall furnish all of the necessary ROW therefor and improve the same according to these Standards, unless otherwise required.

b. No more than 200 residential dwelling units shall be developed with only one access road available. Subdivisions beyond 200 units will be required to provide a second means of access to the development. This provision in no way limits more restrictive secondary access requirements that may be imposed for public safety purposes.

5.2.7.2 Secondary Emergency Access Road Requirements:

a. The City Engineer or City Fire Department may require a secondary access for emergency vehicle traffic.

b. This secondary access may be temporary or permanent, at the option of the Developer. Easements shall be provided at the direction of the City Engineer.

5.2.8 Access Points

5.2.8.1 In accordance with the Subdivision Map Act, each lot or parcel of a Development shall be provided with an approved vehicular access point improved to City Standards to a street improved and maintained by the City or connecting thereto directly or indirectly by means of access which has been approved by the City.

5.2.8.2 The design, number and location of access points must be approved by the City Engineer. The number of access points must be kept to a minimum.

5.2.8.3 Access points will not be permitted for parking or loading areas which would require backing into City streets.

a. *Exception*: Single family (R-1) residences shall be allowed to back into City streets from their permitted parking areas.

5.2.8.4 Where necessary for the safe and efficient movement of traffic, the City may require access points to be designed to provide for limited turning movements.

5.2.8.5 One access point per property may be permitted, unless a development or circulation plan is provided which demonstrates that more than one access is required to adequately handle driveway volumes, and will not adversely affect traffic flow on City streets.

5.2.8.6 Where a property has access to more than one street, access will generally be limited to the lower volume street to minimize the impact upon traffic flow. Access to the higher volume street may be denied and may also be subject to other constraints contained in these Standards and by City regulations.

5.2.8.7 Minimum sight distance shall be provided at all access points in accordance with the provisions of Section 5.3.5.

5.2.8.8 Secondary access may be required for use by emergency vehicles.

5.2.8.9 Major Arterials:

a. Major arterial streets are designed primarily for the movement of through traffic (80% to 90%) with minor usage as access to abutting properties (10% to 20%). Access to abutting properties from major arterials is discouraged.

b. Major arterial streets are typically located on section lines.

c. Major arterials do not penetrate residential subdivisions.

d. Non-residential driveway access on major arterials shall be kept to a minimum as determined by safety, topography, zoning and prior parcelization constraints or other special circumstances. Single family residential driveway access to major arterials is prohibited.

e. Waivers of access on residential subdivisions shall be provided along major arterials except where street access is permitted by the City Engineer.

f. Minimum spacing and type of local street access along major arterials shall conform to City Standard Detail 5.21.

g. Drive approaches, if allowed, shall be subject to the requirements of Section 5.3.15.

5.2.8.10 Minor Arterials:

a. Minor arterials are designed primarily for the movement of traffic between local streets and major arterials with additional usage as access to abutting nonresidential properties.

b. Minor arterial streets are typically located on mid-section lines.

c. Streets connecting to minor arterials shall be limited to a minimum 300-foot spacing.

d. Minor arterials do not penetrate residential subdivisions.

e. Non-residential driveway access on minor arterials shall be kept to a minimum as determined by safety, topography, zoning and prior parcelization constraints or other special circumstances. Single family residential driveway access to minor arterials is prohibited.

f. Waivers of access on subdivisions shall be provided along minor arterials except where street is permitted by the City Engineer.

g. Minimum spacing and type of local street access along minor arterials shall conform to City Standard Detail 5.21.

h. Drive approaches shall be subject to the requirements of Section 5.3.15.

5.2.8.11 Industrial Collectors:

a. Industrial collectors are used for commercial / industrial streets.

b. Streets connecting to industrial collectors shall be limited to a minimum 300 foot spacing.

c. Industrial collectors are allowed to penetrate residential subdivisions.

d. Non-residential driveway access on industrial collectors shall be kept to a minimum as determined by safety, topography, zoning and prior parcelization constraints or other special circumstances. Single family residential driveway access to industrial collectors is prohibited.

e. Drive approaches shall be subject to the requirements of Section 5.3.15.

5.2.8.12 Local Streets:

a. Local streets are designed primarily for access to abutting residential properties.

b. Drive approaches shall be subject to the requirements of Section 5.3.15.

5.2.8.13 Access to State Highways:

a. Access to State Highways (Hwy 58 and Route 202) is regulated by CalTrans. Requests for new access and changes to existing access shall be coordinated with CalTrans.

b. Encroachment permits for access to State Highways must be obtained from Caltrans.

5.2.8.14 Access to County Roads:

a. Access to streets or roads owned and maintained by the County of Kern is regulated by Kern County Roads Department. Requests for new access and changes to existing access shall be coordinated with Kern County Roads Department.

b. Encroachment permits for access to County Roads must be obtained from Kern County Roads Department.

5.2.9 Fire Department Street Requirements

5.2.9.1 Fire Lanes

a. Fire lanes shall be located as determined by the fire chief, and shall not be less than 20’ in width, with inside turning radii of not less than 20’ and shall have a clear height of not less than 15’.

b. Fire lanes identification shall be in such a manner so as to leave no doubt as to their existence and intended purpose. Identification shall be by means of signs being located along the entire length of the fire lane and placed not more than 100’ apart.

5.2.9.2 Fire Lane Identification

Fire Lane signs shall be installed as follows:

a. Signs shall be installed along the entire length of the fire lane at maximum intervals of 100’. Fire lane signs shall be installed within 25’ of any end of the fire lane.

b. The sign shall be perpendicular to traffic flow and shall face the oncoming traffic.

c. The sign shall be approximately four feet from the edge of the driving surface of the fire lane.

d. Fire lane signs may be attached to a building, or mounted on a substantial support.

e. Fire lane signs shall be installed at a height of at least 7 feet above walking surfaces.

f. Obstructions that block the driver's view of the fire lane sign shall not be permitted.

5.2.9.3 Fire Lane Sign Requirements

The signs must be located along the entire length of the fire lane and the curb shall be painted red along the entire length of the fire lane.

a. The sign shall be a minimum of 16 inches vertically and 12 inches horizontally.

b. The sign shall be constructed of 14-gage steel or aluminum.

c. The sign shall have a reflective white background with red letters.

d. There shall be a ¼" inch wide red stripe along all four sides of the sign.

e. The lettering shall be at least 1 inch in height.

f. The lettering at the bottom of the sign indicating "K.C. CODE 17.32.110" shall be ¾" inch in height.

5.2.9.4 Knox Box

a. The fire chief is authorized to require a Knox Box to be installed in an accessible location. The Knox Box shall be of an approved type and shall contain keys to gain access as required by the fire chief.

b. An approved Knox Box system shall be installed in all commercial buildings utilizing an early warning fire detection system, fire sprinkler suppression system indicating valves involved with a fire sprinkler suppression system and or those with controlled access (such as a security gate) or where access to the building is unduly difficult because of secured openings.

5.2.9.5 Fire Hydrant Marking

Fire hydrants shall be clearly identified in an approved manner to prevent obstruction by parking and other obstruction by painting the curb fronting the hydrants red to the limits governed by local ordinances or as directed by the Fire Department. Hydrant location shall also be identified by the installation of a recessed blue reflective marker placed on the hydrant side of and 24 inches from the centerline of the road parallel to the hydrant.

5.2.9.6 Premises Identification

Premises Identification by approved numbers or addresses shall be provided for all new and existing buildings in such a position as to be plainly visible and legible from the street or road fronting the property. This will also require that the addresses be placed on the rear of the structure. The numbers will be a minimum of 8” (for residences, a minimum of 4”) and the numbers or address will be illuminated. If the building has more than one business or suite each entrance and exit will be clearly marked with a letter or number that is a minimum of at least 6”, and placed on the door or just above the door way. Address numbers and letters shall be of a color that is contrasting to the background

5.2.9.7 Compliance with Kern County Fire Department Requirements

In addition to the preceding requirements, the municipal improvements shall also conform to the Kern County Fire Department standards and regulations. When there is a conflict between information on these standards and the Kern County Fire Department standards, the most conservative design shall be used.

5.3 DESIGN STANDARDS

5.3.1 Street Alignment

5.3.1.1 Straight street alignments shall be parallel with the nearest street with alignment in the same direction.

5.3.1.2 Street layout and alignment within or adjacent to subdivisions shall be subject to approval by the City.

5.3.2 Street Widths (ROW)

5.3.2.1 The full width ROW as required below shall be dedicated to the City for all streets within a subdivision. Any additional ROW along bordering streets to widen the adjacent half widths of such streets to the standards given below shall also be dedicated.

5.3.2.2 Street widths and classifications shall be per City Standard Details 5.1 through 5.4 and the following table;

Street Classification	ROW Width (feet)
Major Arterials	110
Minor Arterials	90
Industrial Collectors	78
Local Streets	60

5.3.2.3 Exceptions to the above ROW widths may be required in industrial or commercial areas at the discretion of the City. ROW widths less than those given may be allowed upon approval by the City, but in no case shall any ROW be less than 50 feet.

5.3.2.4 Street classification shall be assigned by the City Engineer in conformance with the General Plan and project requirements.

5.3.3 Street Centerline Radius

5.3.3.1 Horizontal curvature shall be as follows:

Street Classification	Minimum Centerline Radius
Major Arterials	1,500 feet
Minor Arterials	800 feet
Industrial Collectors Local Streets	100 feet

5.3.4 Street Intersections

5.3.4.1 Property Lines at Intersections

a. Additional ROW shall be granted to the City at the intersection of any street. The ROW required by the intersection shall be shown as a single line drawn between the beginning and the ending of 20 foot radius curve tangent to both ROW lines.

b. Where the angle of intersection is acute, or where a line of sight distance problem may be anticipated, an increased property line radius may be required by the City Engineer.

5.3.4.2 Curb Radii at Intersections

Curb return radii shall be 30 feet at all intersections.

5.3.4.3 Street Centerline Intersections

a. All streets entering upon any arterial or collector street shall have their centerlines directly opposite each other or separated by a minimum of 150 feet. Streets entering interior local streets shall have their centerlines separated by at least 150 feet. Attention is directed to the City's Standard Drawings for minimum spacing of street intersections along major streets.

b. Streets shall intersect at right angles where practicable. When topography or other physical feature makes this requirement impracticable an exception may be granted by the City Engineer. The maximum deviation which may be granted shall not exceed a 5° skew from a right-angle intersection at intersections of any streets.

c. Street centerline intersection shall have its location established with an encased survey monument in conformance with Section 5.3.20.

5.3.4.4 Expanded Intersections

a. Where arterials intersect, additional ROW may be required for separate turning movement lanes and straight through lanes.

b. Final configuration of intersection including number of turning lanes and their direction shall be based on the findings of a traffic study and shall be approved by the City Engineer.

5.3.4.5 Four-Way Intersections

Unless prior parcelization or existing conditions warrant otherwise, four-way intersections will not be allowed within residential subdivisions.

5.3.5 Line of Sight

5.3.5.1 This section is intended as a guide to the construction and restriction of improvements in the line of sight for vehicles entering or traveling on city streets.

5.3.5.2 Uncontrolled Intersections:

a. At all corners located on uncontrolled intersections no obstruction to the driver's view in excess of three feet above the adjacent gutter flowline shall be placed in

a triangular area formed by the intersecting street curb-lines and a line connecting them at points 60 feet from the intersection point.

b. See the City Standard Drawing 5.22.

5.3.5.3 Controlled Intersections:

a. Sight distance, measured in feet, shall be based upon a sight distance equal to design speed S in miles per hour multiplied by a factor of 10. Design speeds for various street classifications are as follows:

Classification Design	**Speed(s)**	**Sight Distance (S x 10)**
Major Arterials	45 MPH	450 feet
Minor Arterials Industrial Collectors	35 MPH	350 feet
Local Streets	25 MPH	250 feet

b. Corner sight distance is measured from a point on the minor road fifteen (15) feet from the edge of the major road pavement, and three (3) feet right of the left edge of the lane under consideration. Said point is viewed from a height of 3.75 feet on the minor road to a height of 4.5 feet on the major road.

c. The location of the object to the left is twelve (12) feet from the nearest edge of the major street, six (6) feet where parking is prohibited. Parking is assumed to be prohibited on arterial streets.

d. The location of the object to the right is to be measured at one-half the major road width plus three feet from the nearest edge of the major street.

e. See the City Standard Drawing 5.22.

5.3.5.4 T-Intersections:

At uncontrolled T-intersections, the requirements of both Sections 5.3.5.2 and Section 5.3.5.3 shall be met.

5.3.5.5 Alleys and Minor Driveways:

No obstruction to sight view will be allowed within a triangular area formed by the alley or driveway edge and the interior sidewalk edge (the street ROW line if no sidewalk exists) and a line connecting them at points 10 feet from the intersection point.

5.3.5.6 Landscaping Issues:

a. Landscaping, including fences, shrubs, rocks, etc. over three feet in height above top of curb shall not be placed within the lines of sight defined in the preceding

sections. All landscaping must be maintained at a height of three feet or less with the exception of trees as provided for in Section 5.3.5.6(b).

b. Trees are permitted in the line of sight for controlled intersections provided that the skirt height (bottom of foliage) is maintained seven (7) feet above the adjacent top of curb height. In the event more than one tree is placed, they must be placed on a radial from the view point.

c. See the City Standard Drawing 5.23.

5.3.6 Cul-de-Sacs and Dead-End Streets

5.3.6.1 Residential Developments:

a. The maximum length of a cul-de-sac shall be 600 feet and shall be measured from centerline of intersecting street to the center of cul-de-sac circular ROW.

b. ROW dimensions and curb dimensions shall comply with the cul-de-sac dimensions provided in City Standard Detail 5.15.

c. Offset cul-de-sac shall be approved by the City Engineer.

d. Dead end streets within residential subdivisions are permitted at a tract boundary in a phased development where the street can be extended and used in the next development phase. Dead end streets within residential subdivisions must be barricaded in conformance with City Standard Detail 5.14, or must be provided with a temporary turn-around in conformance with Section 5.3.6.3.

e. Cul-de-sacs shall have their center located with an encased survey monument in accordance with Section 5.3.20.

5.3.6.2 Commercial / Industrial Developments:

a. The maximum length of a dead-end street shall conform to the following table; Length shall be measured from centerline of intersecting street to center of cul-de-sac circular ROW.

Parcels of less than one acre	800 feet
Parcels of 1 acre to 4.99 acres	1,320 feet
Parcels of 5 acres to 19.99 acres	2,640 feet
Parcels of 20 acres or larger	5,280 feet

b. Where a dead-end street serves areas in which several different length limits could apply because of several different parcel sizes, the shortest allowable length shall apply.

c. Offset cul-de-sac dimensions shall be approved by the City Engineer.

d. Dead end streets within commercial / industrial subdivisions are prohibited without the use of a cul-de-sac or temporary turn-a-round.

e. Cul-de-sacs shall have their center located with an encased survey monument in accordance with Section 5.3.20.

5.3.6.3 Temporary Turn-a-rounds:

a. When a street ends at a residential tract boundary in a phased development and the street extends three (3) or more lots past the last intersection a temporary turn-a-round shall be constructed.

b. The turn-a-round for residential development shall consist of a 38-foot minimum radius and pavement section as detailed in the City's Standard Detail 5.26. Temporary turnaround for commercial/industrial developments shall be per the City Standards and as directed by the City Engineer.

c. The developer shall provide for the necessary ROW on the adjacent parcel to accommodate the turn-a-round.

d. Temporary turn-a-rounds shall only be allowed for phased developments where the adjoining parcel is owned by the Developer as the property being developed. The City Engineer may grant a waiver to this requirement if the Developer provides the express written consent of the adjacent property Developer allowing for both the dead-end street and the temporary turn-a-round, together with the appropriate ROW, on the adjacent property. Otherwise, a cul-de-sac shall be provided for in conformance with the City Standards.

e. When a temporary turn-a-round is not being constructed at dead-end street, the paving shall be extended four (4) feet beyond the curb and gutter to allow for street sweeping services.

5.3.7 Street Knuckle

5.3.7.1 Where an intersection between two streets occurs to form an "L" shaped intersection, and where there are no future plans to extend either street to form a tee intersection or a four-way intersection, then the intersection shall be made using a street knuckle conforming to City Standards.

5.3.7.2 Use of street knuckles shall be approved by the City Engineer and shall be limited to interior residential streets or commercial/industrial streets.

5.3.7.3 ROW dimensions and curb dimensions shall comply with the street knuckle dimensions provided in City Standard Detail 5.15.

5.3.8 Turning Lanes

5.3.8.1 In the absence of turning volume data showing the need for greater storage, the following lengths shall be used:

a. Left and right turn storage lanes from an arterial to another arterial shall be designed for a minimum length of 200 feet (measured from beginning of taper to limit line).

b. Left and right turn storage lanes from an arterial or collector into local streets or major private entrances shall be designed for a minimum length of 100 feet (measured from beginning of taper to limit line).

c. Minimum length for left and right turn storage lanes into minor commercial / industrial entrances shall be directed by the City Engineer.

5.3.9 Road Transition Tapers

5.3.9.1 When constructing a roadway that will directly connect with an existing roadway of a different width it is necessary to install a transition taper between the two lanes merging. The length (L) in feet is determined by design speed (V) in mph and offset difference (W) in feet where L=(V^2) x (W/60).

5.3.9.2 Design speeds for various streets are as shown in Section 5.3.5.3.

5.3.9.3 These tapers shall not be used for speed change lanes or left or right turn storage lanes.

5.3.9.4 Tapers for lane drops shall not be constructed immediately preceding an intersection on streets with design speeds over 40 MPH. Widths for all lanes shall be maintained throughout the intersection with the taper beginning beyond the intersection.

5.3.10 Grade Design Criteria

5.3.10.1 Flowline Grades:

a. Street: Minimum flowline grade shall be 0.30%

b. Alley: Minimum flowline grade for v-gutter shall be 0.30%

c. Knuckles: Minimum flowline grade shall be 0.3% on all flowline curves within the knuckle.

d. Cul-de-sacs: Minimum flowline grade shall be 0.4% on all flowline curves within the cul-de-sac.

e. Cross-Gutters: Minimum flowline grade shall be 0.5% measured from BCR to ECR.

f. Exceptions to the minimum grades may be granted only in the case of in-fill development, and as directed by the City Engineer.

5.3.10.2 Cross Slopes:

The design cross slope for any street shall conform to the following table. When conditions require opposing gutters to be at different elevations, the cross slopes of the streets shall conform to the variance allowed.

	Design Standard
Travel Lanes	2%
Parking Lanes	4%

5.3.10.3 Vertical Curves:

a. Residential and industrial streets shall be designed to provide a minimum stopping sight-distance corresponding to a design speed of 25 MPH.

b. Major arterials shall be designed to accommodate vehicle speeds of 45 MPH or more.

c. Vertical curves shall be used when change in grade exceeds 0.50% and shall have a minimum length of 100 feet.

d. The stopping sight distance to be used shall be from the California Department of Transportation Highway Design Manual.

e. Broken back vertical curves consisting of two vertical curves in the same direction separated by a short (less than 200 feet) grade tangent are not permitted.

f. Parabolic vertical curves shall be used and shall be of length specified below. Elevation points on any vertical curve (POVC) shall be shown on the plans at the beginning and ending of the vertical curve (BVC, EVC) and at the increments specified.

Street Classification	**Vertical Curve Length (feet)**	**POVC Increment (feet)**
Major Arterials	400	25
Minor Arterials and Collectors	200	25
Local Streets	100	25

5.3.10.4 Future Extensions:

When any road is extended to a development phased boundary for the purpose of providing a future connection to adjoining property the Developer shall submit an alignment and profile demonstrating the feasibility of such future extension.

5.3.10.5 Superelevated Curves:

Street cross-sectional superelevations will not be allowed.

5.3.11 Street Rough Grading

5.3.11.1 Roadways shall be graded by the developer to full width shown on the standard typical cross-sections shown in City Standard Details 5.1 through 5.4.

5.3.11.2 Grading beyond the ROW may be required by the City Engineer to provide for safe sight-distance and/or to control drainage.

5.3.11.3 All grading or excavating within existing county, city, or state ROW shall be first authorized by a valid permit from the appropriate governing agency.

5.3.11.4 Where improvements are required outside of the ROW as part of the development improvements, the developer shall provide satisfactory easements to allow construction and/or maintenance of the improvements. The easements shall conform to all development requirements including, but not limited to, free and clear dedication, removal of obstructions and guarantee of title.

5.3.12 Street Structural Sections

5.3.12.1 All designs shall conform to the Caltrans Highway Design Manual, Fourth Edition, using the R-value of the subgrade material and the minimum Traffic Index (TI's) provided in this section.

a. All streets shall be designed using the traffic indexes (TI's) listed below:

Description	Traffic Index (TI)
Principal Arterials and Arterials	9
Major and Minor Collectors	7
Local Streets	5
Alleys	3

b. Subgrade "R" values shall be determined by California Test Method No. 301. A minimum of two "R" values shall be obtained for every 1,000 linear feet of road pavement to be installed unless existing soil conditions should warrant additional tests.

c. If in the opinion of the City Engineer, there is a wide variance in the “R” values for a particular development, the developer’s engineer shall either submit additional “R” value tests, or use the lowest “R” value for all streets within the development.

d. Safety Factor: A safety factor of 0.20 shall be applied to the calculated asphalt gravel equivalent thickness for Traffic Indices of 7.0 are greater.

5.3.12.2 Structural Sections, Minimum Allowable:

Calculations supporting street section pavement and base thickness shall be submitted with street improvement plans for review. Calculations shall be performed according to the flexible pavement design procedure outlined in Section 5.3.22. The minimum street section allowed shall be 3-inches A.C. pavement over 8 inches aggregate base material.

5.3.13 Curb and Gutter

5.3.13.1 Curb and gutter shall be required on all streets. Curb and gutter shall direct all runoff from the paved portion of the street to storm drain structures.

5.3.13.2 Flowline slopes for all curb and gutter shall meet the requirements of Section 5.3.10.

5.3.13.3 6 inch curb and gutter shall be used in minor arterials and local streets for residential and commercial developments where the calculated depth of flow for a ten year event does not exceed six (6) inches depth.

5.3.13.4 8 inch curb and gutter shall be used in major arterials and industrial collectors as deemed necessary by the City Engineer.

5.3.13.5 Curb & gutter shall conform to City Standard Detail 5.6.

5.3.14 Sidewalks

5.3.14.1 Residential Developments:

Sidewalks in residential developments shall be installed either directly behind curb (Detail 5.6), or a minimum of 5.0 feet behind back of curb in accordance with the City’s Standard Drawing 5.6A, as determined by the City Planning Department. The use of offset sidewalks in areas other than residential developments shall be as permitted by the City.

5.3.14.2 Commercial / Industrial Developments:

a. Upon written request to the Planning Commission, a developer may install a sidewalk only on one side of the street in an industrial subdivision. Such request must be accompanied by a “Sidewalk-Pedestrian Circulation Plan” for the area.

b. Sidewalks shall be constructed in accordance with the City's Standard Drawing 5.6.

5.3.14.3 Other Requirements:

Meandering sidewalks typically installed in landscaped areas shall also meet the requirements of Division SIX - Standards for Landscaping.

5.3.15 Drive Approach

5.3.15.1 General:

a. All construction to connect driveways to City streets must first be authorized by a valid permit issued by the City. The drive approach shall conform to the provisions of these standards.

b. Drive approaches must lead to a legal off street parking space or area.

c. After construction and acceptance, all drive approach repair and maintenance shall be the responsibility of the property owner.

d. The construction of all drive approaches must conform to City Standard Detail 5.7 for residential approaches and 5.8 for commercial approaches.

e. Special designs for commercial or industrial drive approaches with moderate truck volumes shall be approved by the City Engineer.

5.3.15.2 Design Criteria:

a. General Requirements:

1) The nearest top edge of any drive approach must be at least 3 feet from the centerline of any utility pole, drainage facility and/or appurtenance, or traffic signal or street light standard, and must also be at least 2 feet from the nearest projection of such facility.

2) Access shall not be allowed within turn lane transitions.

3) Arrangements for the removal or relocation of any public utilities, structures, trees or plants must be made by the Developer. Removal or relocations must be accomplished at no cost to the City.

b. Residential:

1) The top edge of the drive approach must be not less than 5 feet from the end of the curb return for single family residential developments. (See City Standard Detail 5.7)

2) Where two or more drive approaches serve adjacent single family residential property, the minimum distance between the nearest top edges of the drive approaches shall be either 5', or shall be greater than or equal to 20 feet. (See City Standard Detail 5.25)

3) The throat drive approach width (bottom of wing to bottom of wing width) must equal the width of the garage opening if the garage is within 25 feet of the right-of-way line. In all other cases, the drive approach must have a minimum throat width of 12 feet and a maximum throat width of 32 feet. (See City Standard Detail 5.7)

4) Circular Drive Approaches: Each drive shall lead to a standard (9'x 20') parking space behind the building setback line. Adjacent drives on the same property shall be a minimum of 20 feet apart. All other standards shall also apply.

5) RV Parking: Developed RV parking shall be designed such that entire vehicle is parked behind the building setback line.

c. Non-Residential:

1) Where two or more drive approaches serve adjacent non-single family residential property, the minimum distance between the center of the drive approaches shall be 150 feet on arterials and 100 feet on collectors, or the maximum distance possible. (See City Standard Detail 5.25)

2) The throat drive approach width shall be have a minimum of 15 feet for one way drive aisles or 24 feet for two way drive aisles, and shall have a maximum throat width of 36 feet. For high volume streets the maximum will be required. Industrial type approaches with projected high truck volumes will have a maximum throat width of 50 feet.

5.3.16 Street Lights

5.3.16.1 The Developer shall provide street lights in accordance with these Standards.

5.3.16.2 On local interior streets, the street light standard, ballast, luminar, and pull box shall be installed in accordance with standard Southern California Edison Company (SCE) practice. Electrical service easements shall be granted as required.

5.3.16.3 The Developer shall post security with the City prior to construction to assure the installation of the electrical service.

5.3.16.4 The developer shall enter into a LS-1 agreement with SCE such that all street light facilities are owned and maintained by SCE.

5.3.16.5 Street light poles shall be numbered and labeled in accordance with SCE's standards. Pole numbers will be assigned by SCE.

5.3.16.6 Street lights shall be energized and operating properly prior to the City's acceptance of the improvements.

5.3.16.7 All street lights within the City shall utilize Dark Sky Technology to minimize light pollution. Lamps for residential, commercial, and industrial areas shall be of the Flat Glass type, full cut off or as specifically designated by the City for specific developments. Developer/ Owner shall contact the City's Planning Department for approved vendors.

5.3.16.8 Alternate street light styles within residential subdivisions may be allowed at the discretion of the City. Alternate styles may necessitate an alternate agreement with SCE. In order to be approved:

a. A written request must be made to the Community Development Director and the City Engineer requesting the use of alternate street lights.

b. Developer must demonstrate to City that proposed alternate street lights will provide the same or similar illumination to standard City street lights.

c. Alternate street lights shall direct light downward towards the street and not be omnidirectional or skyward.

d. Developer shall agree to provide additional replacement street lights if required by City Engineer when non-standard street lights are proposed.

5.3.16.9 Street Light Requirements:

a. Residential Developments (Collector and Local streets):

1) Street lights shall be located at intersections, at mid-block when blocks are longer than 600 feet between intersections, at ends of cul-de-sacs greater than 150 feet in length, and on curved streets as required by the City Engineer. Bulbs shall be 100 watts (9,500 lumens).

2) In the absence of intersections, street lights within a residential development shall be spaced as required by the City Engineer.

b. Commercial and Industrial Developments (Collector and Local streets):

1) Streetlights shall be located at intersections and ends of cul-de-sacs greater than 150 feet in length. Bulbs shall be 100 watts (9,500 lumens).

2) In the absence of any intersections, street lights within a commercial or industrial development shall be spaced per the City Engineer.

3) In commercial, industrial or residential areas additional street lights shall be installed as required by the City Engineer.

c. Other:

Street lights located within the City's downtown area as determined by the City shall be per City Standards 5.20 and 5.20A.

5.3.17 Street Name Signs

5.3.17.1 Street signs bearing the name of each intersecting street shall be installed at the northwest and southeast corners of cross street intersections. At tee intersections, one street sign shall be installed opposite the centerline of the intersecting street. Refer to City Standard Drawing 5.12 for additional requirements.

5.3.17.2 Street sign make, materials, appearance, construction, and final location shall conform to City Standard Details 5.12 and 5.12A.

5.3.18 Regulatory or Warning Signs

5.3.18.1 Regulatory and/or warning signs shall be provided where determined to be necessary by the City to direct and control traffic within or around the development.

5.3.18.2 Regulatory and/or warning signs provided shall be per the latest edition of the Caltrans "Traffic Manual". All traffic signs shall be new.

5.3.18.3 "End of Road" signs shall be placed at the end of all dead-end roads, temporary, or permanent.

5.3.19 Pavement Striping and Marking

5.3.19.1 Pavement striping shall be in accordance with the latest edition of the Caltrans "Traffic Manual" and as directed by the City Engineer.

5.3.19.2 Pavement markers shall conform to Section 85, “Pavement Markers” of the State Specifications. All pavement markers shall be recessed.

5.3.20 Encased Survey Monuments

5.3.20.1 Monuments shall be required as specified in the Subdivision Ordinance of the City of Tehachapi.

5.3.20.2 Survey monuments shall be placed by a registered Land Surveyor or Civil Engineer (licensed prior to 1982) in conformance with the Subdivision Map Act.

5.3.20.3 Monument encasement shall be per City Standard Detail 5.11.

5.3.20.4 Encased survey monuments shall consist of a survey monument and a street level encasement that provides access to the survey monument

5.3.20.5 Encased survey monuments shall be placed at the centerline intersection of two streets in conformance with the Subdivision Map Act.

5.3.20.6 Cul-de-sacs shall have their center located with an encased survey monument.

5.3.20.7 Offset cul-de-sacs shall have their center and the endpoint of the street located with an encased survey monument.

5.3.20.8 Survey monuments shall be installed at the beginning and end (BC and EC) of all centerline curves.

5.3.21 Public Utilities Within or Along Street Right-of-Way (ROW)

5.3.21.1 Public Utilities (natural gas, electric, telephone, cable television, etc.) for a Development shall conform to the following provisions;

5.3.21.2 Design and Installation:

a. All utilities shall be designed, constructed, and installed by the Developer in accordance with all applicable City requirements and State laws.

b. Utilities shall be located underground.

c. Utilities shall be allowed along the interior side lot lines of a parcel, so long as a public utility easement is granted with the map for the Development, and the easement does not exceed normal building setbacks.

d. Utility vaults requiring surrounding earth to be retained shall have a masonry or concrete retaining structure constructed. Wood retaining walls shall not be allowed. Each structure shall meet the requirements of its corresponding utility company.

e. To the greatest extent possible, above ground utility facilities shall be kept to a minimum and/or located in landscaped areas (dedicated landscape easements, garage side of residential lots, other non-grassy dedicated areas).

f. Existing above-ground powerlines that fall within the area to be improved as part of a development shall be undergrounded at the expense of the Developer.

5.3.21.3 Placement within ROW:

a. Underground utilities including services shall be installed prior to surfacing of the streets, and shall be located behind the flowline of the gutter, and within a Public Utilities Easement or street ROWs.

b. The minimum cover over any underground utility within a street ROW shall be 30 inches.

c. When allowed, utility poles shall be a minimum of 6 feet behind ultimate future curb and gutter flowline or at edge of ROW.

d. Utility vaults may be installed within the sidewalk area, so long as the cover conforms to all applicable health and safety standards.

5.3.22 Flexible Pavement Design Methodology

5.3.22.1 Structural section (pavement, base, and subgrade material) for streets and alleys shall be designed according to the Caltrans Highway Design Manual or with the procedure as outlined below.

5.3.22.2 This pavement design outline is a condensation of the pavement design procedure described in Caltrans Highway Design Manual, Fourth Edition.

5.3.22.3 Calculations following this general outline must be reviewed by the City Engineer before final road structural section is approved.

5.3.22.4 Procedure

a. Determine traffic index (TI) for street section being designed.

b. Obtain resistance value (R) for subgrade (native material) by California Test Method No. 301. Include soils report from Soil Engineer with calculations.

c. Select base material to be used (Class 2 or 3 aggregate base [AB]).

d. Calculate gravel equivalent of asphalt concrete (AC) section (GEac) from

GEac = 0.0032 * TI * (100-Rab) where Rab is “R” value of aggregate base.
Rab = 78 for Class 2 AB
= 70 for Class 3 AB

e. Add safety factor of 0.20 to GEac from Step d.

f. Calculate thickness of AC section (Tac) from

Tac (ft.) = GEac/GFac where GFac is the AC gravel factor.
GFac = $5.67/(TI)^{1/2}$ for Tac $\leq$ 0.50’
GFac = $7.0\ (Tac)^{1/3} / (TI)^{1/2}$ for Tac > 0. 50’

g. Calculate gravel equivalent of total street section (GEtotal) from

GEtotal = 0.0032 * TI * (100-R) where R is “R” value of subgrade from Step b.

h. Add safety factor of 0.20 to GEtotal from Step g.

i. Obtain gravel equivalent of base section (GEab) from

GEab = GEtotal – GEac where GEtotal is from Step h and GEac is from Step e.

j. Calculate thickness of base section (Tab) from

Tab (ft.) = GEab/GFab
where GFab = 1.10 for C1 2 and C1 3 AB.

k. Check design: GEac (Step e) + GEab (Step i) must be greater than or equal to GEtotal (Step g).

5.4 MATERIAL STANDARDS

5.4.1 Asphalt Concrete

5.4.1.1 Asphalt Concrete shall conform to the provisions of the State Specifications. Asphalt concrete shall be Type B and shall conform to the provisions in Section 39, "Asphalt Concrete," of the State Specifications and these special provisions.

5.4.1.2 Aggregate for Type B asphalt concrete shall conform to the requirements for either ½ inch or ¾ inch maximum-medium grading as specified in Section 39-2.02, "Aggregate," of the State Specifications.

Classification	Asphalt Aggregate Spec.
Local Street	½" Max Medium
Industrial Collector	¾" Max Medium
Minor Arterial	¾" Max Medium
Major Arterial	¾" Max Medium

5.4.1.3 Asphalt shall be Performance Grade (PG) 64-16 conforming to the Caltrans "South Mountains" area classification. Asphalt shall conform to the latest version of the State Specifications.

5.4.1.4 All cut asphalt concrete or road mix surfacing edges against which new hot-mix asphalt concrete is to be placed shall be coated with SS-1 type paint binder applied at the rate of 0.1 gallon/square yard of surface covered in accordance with Section 39-4.02 of the State Specifications.

5.4.1.5 A tack coat of asphaltic emulsion SS-1 conforming to the applicable provisions in Section 94 of the State Specifications and these specifications shall be required for all areas to receive hot-mix asphalt concrete overlay. The tack coat shall be applied at the rate of 0.25 gallons/square yard in accordance with Section 39-4.02 of the State Specifications.

5.4.1.6 Asphalt Mix Design:

a. At the request of the City, the Developer shall submit to the City an Asphalt Mix Design. The Asphalt Mix Design shall be prepared by an accredited construction inspection & testing laboratory and signed by an engineer.

b. The Asphalt Mix Design shall show the following information for various amounts of asphalt binder in conformance with California Test Method 367.

1) Gradation of the aggregate in the asphaltic concrete proposed for the development.

2) Hveem Stability results,

3) % Air voids

4) Unit Weights (lbs/CF)

5) Whether or not the test sample exhibits signs of flushing

c. The asphalt mix design shall give a final recommendation for percentage of asphalt binder to be used in the mix proposed for paving.

d. New mix designs shall be submitted whenever asphalt suppliers change or when the properties of the asphaltic concrete change significantly.

5.4.2 Aggregate Base

5.4.2.1 Aggregate base shall be Class 2, 3/4" maximum gradation as described in Section 26 of the State Specifications. Recycled aggregate base shall not be used.

5.4.2.2 Aggregate Base shall be free from all vegetable and deleterious material, and shall conform to the grading and quality requirements specified in Section 26 of the State Specification or as shown below. Developer shall furnish to the City test results demonstrating conformance of material to be used as Aggregate Base prior to placing any base material.

5.4.3 Herbicide or Weed Killer

Use Gallery (Isoxaben) or Surflan (Oryzalin) by Dow AgroSciences, Pre-M (Pendimethalin) by American Cyanamid Co., or equal.

5.4.4 Pavement Striping and Marking

Pavement striping and marking material shall be thermoplastic paint conforming to Section 84-3, "Paint Traffic Stripes and Pavement Markings" of the State Specifications shall be used as the standard construction material for all pavement markings. Solvent-borne paints are prohibited.

5.5 CONSTRUCTION STANDARDS

5.5.1 General

5.5.1.1 All street construction, reconstruction, and rehabilitation performed shall be done in accordance with appropriate provisions and construction details, Section 10 to Section 95, inclusive, of the State Specifications, City Standard details, and in accordance with the following special provisions.

5.5.1.2 Street pavement and surfaces shall be removed and replaced in all areas of construction where excavation is required and as approved by the City. Resurfacing of existing pavement and surfaces damaged or removed in connection with the construction of improvements shall conform to the provisions of permits issued by the state or county agency for the work within the ROW of the respective agency.

5.5.2 Earthwork

All earthwork required for construction of street pavement, including replacement of existing surfaces, shall conform to the provisions of Section 2.9.

5.5.3 Removal of Existing Surfaces

5.5.3.1 Existing surface material shall be removed as specified below and disposed of in accordance with all applicable laws.

5.5.3.2 Prior to removal of existing surfacing, cuts shall be made neat and straight parallel with roadway centerline or at right angles to the same. All cut edges shall provide clean, solid, vertical faces free from all loose material.

5.5.3.3 Concrete pavement, cross-gutters, curbs and gutters, sidewalks, driveways and concrete surfaces of whatever nature shall be saw cut to a minimum depth of 1-1/2 inches prior to removal. Said saw cut shall be made to the nearest joint.

5.5.3.4 Streets and alleys surfaced with asphalt concrete pavement shall be initially cut by means of pneumatic pavement cutters or other approved equipment at the limits of the trench and/or excavation prior to removal of surfacing. After backfilling the excavation, asphalt concrete pavement shall be saw cut at a point not less than 6 inches outside the limits of excavation or the previous pavement cut (made by pneumatic tools), whichever limits are the greater. The additional surfacing saw cut shall be removed and disposed of prior to resurfacing.

5.5.3.5 Existing road mix surfaces shall be cut with pneumatic cutters as specified above, but will not require saw cutting prior to resurfacing.

5.5.4 Resurfacing

5.5.4.1 In all streets, alleys or other areas where the existing surface is removed, broken or damaged by equipment or in which the ground has caved in or settled due to the installation of the improvements, the surface shall be restored to the original grade and crown section. Where the street has been improved with pavement, base material, curb and gutter, sidewalk, cross gutter, and/or any other concrete improvement, trenches or damaged sections shall be restored with the type of improvement conforming to that which existed prior to the work.

5.5.4.2 Prior to resurfacing, the existing surfacing shall be removed as provided in Section 5.5.3. All broken and jagged edges of the trench edge shall be straightened. If during the initial removal of the existing surface, a method of removal was used which disturbed adjoining improvements or if during general construction the adjacent improvements were disturbed, then these adjoining improvements shall also be removed and replaced.

5.5.4.3 All resurfacing shall match the appearance of the existing improvements, and finished pavement shall not deviate from existing grade by more than 1/8-inch in 10 feet and shall be free from ruts, depressions, and irregularities. Replacement of concrete surfaces shall conform to the Specifications for Concrete Construction in 5.6 of these Standards.

5.5.4.4 In the event that no pavement structural section requirements are specified by any other agency, the minimum pavement section for pavement patches shall be 3 inches of asphalt concrete pavement over 8-inches of Class 2 aggregate base or match the existing, whichever is greater.

5.5.4.5 In the event that it is necessary to construct a temporary patch, or provide temporary surfacing, the materials used shall be approved by the City or other agency having jurisdiction. A permanent patch shall be constructed as soon as practical.

5.5.5 Subgrade Compaction

5.5.5.1 The top 12-inches of the finished subgrade immediately prior to placement of aggregate base thereon shall be scarified and recompacted to a relative compaction of not less than 95 percent of maximum dry density as determined by test ASTM D-1557 (5 layer).

5.5.5.2 The subgrade shall be smooth and uniform, and true to the required grade and cross section within a tolerance of 1-inch above or below the true grade.

5.5.5.3 The Contractor shall repair at his expense any damage to a prepared subgrade caused by his operations or by use of public traffic.

5.5.5.4 No material shall be placed upon the prepared subgrade until the subgrade is in a condition meeting the requirements of these standards and has been approved by the City.

5.5.6 Aggregate Base

Aggregate base shall be moistened to within 2% of optimum moisture content and compacted in place to 95% of maximum dry density as determined by ASTM D-1557 (5 layer). Thickness shall be as specified on the approved plans.

5.5.7 Asphaltic Concrete

5.5.7.1 Mixing

The hot-mix asphalt concrete shall be mixed in strict accordance with the requirements set forth in Section 39 of the State Specifications.

5.5.7.2 Hauling

a. The beds of trucks used to haul asphalt concrete may be coated with a light film of distillate or light oil before loading. Amounts of oil that form visible pools in the truck bed shall be removed prior to loading.

b. The temperature of the asphalt concrete discharged into the hauling vehicles shall not vary more than 20 degrees F for successive loads.

c. When the hauling time from the mixing plant to the jobsite exceeds 2 hours, or when rain is falling along the haul route, asphalt concrete shall be covered with tarpaulins during transport. The tarpaulins shall completely cover the load and be firmly secured.

d. Asphalt concrete shall be delivered to the site of the work without segregation of the ingredients and within the temperature range specified in Section 39 of the State Specifications.

5.5.7.3 Placement

a. Placement of hot-mix asphalt concrete shall be in strict accordance with the requirements set forth in Section 39 of the State Specifications.

b. The amount of material spread in one day shall not exceed that which can be compacted in the same day.

c. No asphalt concrete shall be placed when the atmospheric temperature is below 50 degrees F at the site of the work.

d. Asphalt concrete shall be spread in place with a mechanically driven asphalt spreading machine typical for this type of construction.

1) The asphalt spreading machine shall be minimum 10 feet wide and shall be equipped with vibratory tampers, and retractable wings to allow for wider asphalt placements.

2) The asphalt spreading machine shall spread the asphalt material and produce surface texture of uniform appearance ready for compaction without further shaping.

3) The maximum width of asphalt placed shall be 12 feet. Maximum lift size shall be 3 inches, minimum lift size shall be 1½ inches unless specified otherwise.

e. The minimum temperature of asphalt concrete delivered to the job site shall be 250º F. The temperature shall be determined with an asphalt temperature gauge. Asphalt with temperatures below 250ºF will be rejected by the City.

5.5.7.4 Compaction

a. Asphalt shall be compacted in place in accordance with Section 39-6.03 of the State Specifications. The compaction equipment shall meet the following specifications:

1) Breakdown Roller - 10-12 ton tandem wheel steel vibratory roller

2) Pneumatic Roller - 8 ton pneumatic rubber tire roller

3) Finish Roller - 8-10 ton tandem wheel steel roller

b. Rolling shall start at the lower edge and progressing toward the centerline or higher point. Under no circumstances shall the center of the road be rolled before the lower portions have been rolled.

c. Steel-drum rollers shall be supplemented with pneumatic-tired rollers. Rollers shall meet the requirements of Section 39 of the State Specifications.

d. Asphalt concrete pavement shall be compacted to a minimum of 95 percent of the laboratory maximum density as determined by California Test Method 366.

e. The completed surfacing shall be thoroughly compacted as specified above and shall be free from ruts, humps, depressions or irregularities. The surface shall not vary more than 0.02 feet when checked with a 10-foot straight edge.

f. The edges of the completed surfacing shall be trimmed uniformly to the required width. Flowlines shall be left clean and unrestricted. Excess material shall be removed from the site as specified in the City Standards for Earthwork.

5.5.8 Fog Seal

5.5.8.1 All new asphalt surfaces shall receive a fog seal.

5.5.8.2 Fog seal shall be an approved mixture of water and asphaltic emulsion conforming to Section 94 of the State Specifications.

5.5.8.3 Fog seal shall be applied as set forth in Section 37-1 of the State Specifications at the rate of 0.05 gallons of asphalt emulsion per sq. yd. of surface covered.

5.5.8.4 Fog seal shall be performed after paving has been completed and before any manholes, valve boxes, and other utility appurtenances are brought to grade.

5.5.9 Adjusting Existing Highway Facilities

All existing sewer & storm drain manholes, water valve boxes, and other substructures shall be brought to grade.

5.5.10 Pavement Markings and Striping

5.5.10.1 Pavement striping layouts & placement shall be in accordance with Section 5.3 of this manual. Pavement striping materials shall be per Section 5.5.

5.5.10.2 Removal of existing striping: When necessary, existing pavement striping shall be removed in accordance with the following:

a. Traffic stripes and pavement markings shall be removed to the fullest extent possible from the pavement by any method that does not materially damage the surface or texture of the pavement or surfacing. Where blast cleaning is used for

the removal of painted traffic stripes and pavement markings, the area shall be shielded so that no material from the blasting operation is allowed to enter the area that is open to the public traffic.

b. Traffic stripes shall be removed before any change is made in the traffic pattern.

c. After removal of traffic stripes and pavement markings, a fog seal coat shall be applied in conformance with the Section 5.8.8 and the following: In traffic stripe removal areas, the fog seal coat shall be applied over the traffic stripe removal area and to irregular and varying widths with an average width of 2 feet on each side of the blast cleaned traffic stripe removal area. In pavement marking removal areas, the fog seal coat shall be applied to the blast cleaned rectangular area.

d. Sand or other material deposited on the pavement as a result of removing traffic stripes and markings shall be removed as the work progresses. Accumulations of sand or other material which might interfere with drainage or might constitute a hazard to traffic will not be permitted.

e. Blast cleaning for removal of traffic stripes shall be feathered out to irregular and varying widths. Pavement markings shall be removed by blast cleaning a rectangular area, rather than just lettering or markings, so the old message cannot be identified.

5.5.10.3 Temporary Delineation: Temporary delineation consists of reflective traffic line tape applied in pieces not less than 4 inches long nor less than 4 inches wide, spaced no more than 20 feet apart on tangents and no more than 10 feet apart on curves. Apply reflective traffic line tape in accordance with the manufacturer's instructions. Temporary delineation must be the same color as the permanent delineation and must be completely removed upon installation of permanent delineation.

5.5.11 Applying Herbicide or Weed Killer

Apply weed killer or herbicide on base prior to placing pavement. Apply herbicide along with water at the rate recommended by the manufacturer to control dawny brome grass, puncture vine, and plantain. Apply from outside of curb to opposite outside of curb and for the full width of roadways and parking areas.

5.6 CONCRETE CONSTRUCTION

All concrete construction shall conform to the provisions of Sections 40 and 90 of the State Specifications, except as herein modified.

5.6.1 Concrete Classification

5.6.1.1 Class A concrete shall contain not less than six sacks of Portland cement per cubic yard and have a minimum compressive strength of 4,000 psi in 28 days.

5.6.1.2 Class B concrete shall contain not less than five sacks of Portland cement per cubic yard and have a minimum compressive strength of 3,000 psi in 28 days.

5.6.1.3 Class C concrete shall contain not less than four sacks of Portland cement per cubic yard and have a minimum compressive strength of 2,000 psi in 28 days.

5.6.2 Reinforcing

Where reinforced concrete is required, reinforcing steel conforming to Section 52 of the State Specifications shall be furnished and installed.

5.6.3 Concrete Improvements

5.6.3.1 All concrete improvements shall be constructed in conformance with the Standard Details. White pigmented curing compounds, conforming to ASTM C-309, shall be applied to all exposed surfaces of concrete improvements within 6 hours of pouring.

5.6.3.2 Excavation, grading and backfilling behind the curb returns, including grading of parkway, shall be done in accordance with Section 2.9. Any excavated material not needed for grading or backfill, in the opinion of the City, shall be removed from the site of work and disposed of at the expense of the Developer.

5.6.4 Miscellaneous Structures

5.6.4.1 Concrete curb and gutter shall conform with the details shown on City Standard Detail 5.6. The concrete shall be Class B as defined in Section 5.6.1.

a. Sidewalks shall conform to the City Standard Detail 5.6. The concrete shall be Class B as defined in Section 5.6.1.

b. Residential & Commercial Drive Approaches shall conform to the City Standard Details 5.7 and 5.8. The concrete shall be Class A as defined in Section 5.6.1.

c. Cross Gutters shall conform to the City Standard Detail 5.9. The concrete shall be Class A as defined in Section 5.6.1.

d. Median Curbs shall conform to the City Standard Detail 5.18. The concrete shall be Class B as defined in Section 5.6.1.

e. Concrete used to adjust existing facilities to grade shall meet the requirements of Section 5.6.1. Class A minimum.

5.6.4.2 The operations of depositing, compacting, and finishing concrete structures shall be conducted so as to build a satisfactory structure. If any section of concrete is found to be porous, or is otherwise defective, it shall be removed and replaced.

5.6.4.3 Concrete that has been broken, cracked, or vandalized shall not be acceptable to the City and shall be replaced at no cost to the City.

No concrete is to be placed until the subgrade has been compacted and tested in conformance with the applicable City Standards.

5.6.5 Grout

5.6.5.1 Grout used in precast manholes and joint construction shall be prepared in accordance with ASTM, Designation C-476 (latest edition). The mix shall consist of one part Portland cement and two parts plastic sand. The cement and sand shall be mixed dry and then the water shall be added. All grout shall be mixed in a proper watertight box, and in no case shall be mixed on the ground. No grout shall be used that shows evidence, in the Engineer's judgment, of having set, and no remixing of grout or addition of water thereto will be permitted.

5.6.5.2 Nonshrink grout shall be made with a hydraulic cement, which when mixed with water will harden rapidly to produce a permanent high strength material. Nonshrink grout shall be non-metallic and shall not contain gypsum, calcium chloride, or other chemicals which accelerate the corrosion of embedded steel. The grout shall show no shrinkage prior to initial setting in accordance with ASTM C827 and shall show no shrinkage in the hardened state when tested in accordance with ASTM C-157 and Corps of Engineers CRD C-588. Non-shrink grout shall be Five Star Grout as manufactured by U. S. Grout Corporation, Masterflow 713 Grout as manufactured by Master Builders, or equivalent.

5.6.5.3 When mixed in accordance with manufacturer's instructions, the nonshrink grout shall be semi-fluid and suitable for placing by pouring into place when mixed to a flowable consistency. The compressive strength tested in accordance with ASTM C-109 shall be not less than 3,000 psi at 1 day and not less than 6,000 psi at 28 days. Setting time tested in accordance with ASTM C-191 shall be not less than 30 minutes.

5.6.5.4 Epoxy grout shall be used where specified herein or where indicated on the Plans. Epoxy grout may be used to repair surface defects in the concrete work.

5.6.5.5 Epoxy grout shall be made with epoxy and sand. The sand shall be clean, bagged, graded, kiln dried silica sand. The prepared grout shall wet the contact surface to provide proper adhesion or a coat of epoxy shall be applied prior to placing the epoxy grout. Follow manufacturer's published instructions for mixing, proportions of epoxy to sand, and installation procedures shall be followed.

5.6.5.6 For vertical or overhead work the epoxy shall be Sikadur Hi-Mod Gel manufactured by Sika Chemical Corporation, Concressive 1438 manufactured by Adhesive Engineering Company, or equivalent. For horizontal work, the epoxy shall be Sikadur Hi-Mod LV manufactured by Sika Chemical Corporation, 1001 LPL manufactured by Adhesive Engineering Corporation, or equivalent. Epoxy grout for vertical or overhead work may be used for horizontal work.

5.7 GENERAL AND CONSTRUCTION NOTES

General Notes

General notes shall include all necessary notes to convey the intent of the City's drainage and grading standards, the project at hand, and as directed by the City Engineer. They shall include, but not be limited to the following.

1. 48 hour inspection notice - Prior to the start of any phase of construction, the Office of the City Engineer shall be given at least 48 hours notice.

2. Contractor shall call Underground Service Alert (USA) and the City of Tehachapi Department of Public Works at least two (2) working days prior to the start of construction to mark the locations of existing utility lines.

3. Contractor shall obtain all necessary permits before start of construction. A permit shall be obtained from the City for all work to be performed in City right-of-way.

4. The locations of existing utilities and underground pipelines shown on these plans are approximate only. The contractor shall determine the exact location of all existing utilities and underground pipelines before commencing work. Contractor assumes all liability for any and all damages to existing utilities occasioned by his failure to exactly locate, preserve, and protect any and all underground utilities and pipelines.

5. Contractor agrees that they shall assume sole and complete responsibility for job site conditions during the course of construction of this project, including the safety of all persons and property; that this requirement shall apply continuously and not be limited to normal working hours; that the contractor shall defend, indemnify, and hold the Developer, Design Engineer, and the City harmless from any and all liability, real or alleged, in connection with the performance of work on this project, excepting the liability arising from the sole negligence of the Developer, Design Engineer, or City.

6. All construction work shall be performed in accordance with City of Tehachapi Subdivision and Development Standards, the recommendations contained in the preliminary soils report for the development, and as directed by the Design Engineer and approved by the City Engineer.

7. The Contractor shall provide the Design Engineer with "As-built" plans upon completion of the work. The cost thereof shall be paid by the Contractor. No building permit will be issued by the City of Tehachapi until such a time as the finished grading has been certified by the Design Engineer and "As-built" plans submitted to the City of Tehachapi Engineering Department.

8. Approval of these plans does not relieve the Developer of responsibility for correction of mistakes, errors or omissions by same. If during the course of construction of these improvements, public interest requires a modification or departure from the City's Specifications, Details, or these Improvement Plans, the City Engineer shall have authority to require in writing such modification or departure and specify the manner in which the same is done.

9. All existing improvements (curb, gutter, sidewalk, cross gutters, fencing, etc) that are removed, damaged, or undercut shall be repaired or replaced as directed by the City Engineer.

10. All concrete shall be in conformance with City of Tehachapi Standards.

11. All streets and monuments, lot corners, pipes and other permanent monuments disturbed during the process of construction shall be replaced before acceptance of improvements by the City of Tehachapi.

12. Location of centralized mail delivery units shall be determined in consultation with the postal service.

13. The design engineer shall exercise sufficient supervisory control during construction to ensure compliance with the plans, specifications, and codes within his purview.

Street Construction Notes

1. All work shall conform to the current edition of the State Specifications and all "Standard Plans" and "Special Provisions" referenced.

2. All work in the public ROW shall be per the current City of Tehachapi Improvements Standards, policies, codes, and permit requirements, and shall be performed to the satisfaction of the City Engineer.

3. Work in public streets shall be prosecuted to completion without delay so as to provide minimum inconvenience to adjacent property owners and to the traveling public.

4. The Contractor shall take all necessary and proper precautions to protect adjacent properties from any and all damage that may occur from storm water runoff and/or deposition of debris resulting from any and all work in connection with his private development construction.

5. The amount of required A.C. pavement and aggregate base shall be determined by the Developer's soils engineer and shall be based on subgrade soils tests and the City-supplied traffic indices. Plans shall be revised to show actual pavement and base section to be constructed.

6. Before working in the area to be cold-planed, the Contractor is to stretch a string line between the lip of the gutter and street centerline and determine whether or not the existing asphalt pavement surface is above or below the line. He shall also determine the overall depth of the existing asphalt section. Should it be determined that, after cold planing off 1-1/2" of asphalt below the taut string line, the remaining asphalt is less than 2" thick; then the entire section (to centerline) shall be removed and replaced.

7. There shall be no tunneling under existing concrete cross gutters, curb and gutters, and spandrels. If a utility crossing is needed, concrete shall be removed to the nearest joint on either side and reconstructed.

Traffic Control Notes

1. Notify the City of Tehachapi, two (2) working days in advance of all work that affects traffic on city streets.

2. No construction work will commence until all construction signing is in place.

3. Construction signing shall be in accordance with the State of California Manual of Warning Signs, Lights, and Devices, the City shall approve the location of all construction signs and devices to be used on this project.

4. All construction signs and devices shall be reflectorized and provided by the Contractor. Contractor shall erect and maintain said signs for the length of the contract. All signs to be mounted on 4-inch by 4-inch posts with wood block. Zinc-coated 4-inch lag screws and washers. Minimum embedment of post shall be 3 feet 6 inches into soil. Bottom of sign shall be seven (7) feet above centerline of road grade.

5. Contractor shall also provide any additional construction traffic control necessary. This may include temporary travel lane tape delineators, and temporary signing for all permanent signs removed.

6. Competent flagmen and necessary signing shall be used when:

    a. Two-way traffic must use a single lane, or

    b. Equipment is working on or immediately adjacent to traveled roadway.

7. Only plywood, metal or canvas shall be used as a sign cover. Sign cover shall be placed to cover the entire sign message that is temporarily inapplicable.

8. Minimum width of any traveled lane shall be twelve (12) feet.

9. All regulatory signs shall be in place prior to acceptance of improvements by the City of Tehachapi.

THIS PAGE LEFT BLANK INTENTIONALLY.

DIVISION SIX
STANDARDS FOR LANDSCAPING

6.1 GENERAL

6.1.1 Purpose and Scope

This division applies to walls and landscaping to be placed in public rights of way and/or to be maintained by the City. It's intended to provide and promote adequate, coordinated, and modern development, enhancing the esthetics of the City. These standards establish the minimum criteria of design, materials, plants, and methods to be used in providing landscaping for developments in the City.

6.1.2 Enforcement

Provisions of these standards for landscaping shall be enforced by the City Engineer.

6.1.3 Waiver of Review Process

These standards apply only to landscaping projects to be owned or maintained by the City.

6.2 DESIGN STANDARDS

6.2.1 General

6.2.1.1 Landscape and wall plans shall be designed so as to conform to the approved conceptual plans for the Development.

6.2.1.2 Arterials will require a landscaped area with a minimum width of eleven (11) feet including the width of the wall and sidewalk. Arterials will also require landscaped medians. Medians shall conform to Division 5, Standards for Streets and Traffic Circulation.

6.2.1.3 Landscaping shall be provided on arterial and collector streets on which is placed a requirement for construction of masonry walls, median islands, and at the entrance to drainage basins or on other areas as required by the City.

6.2.1.4 Collectors will require a landscaped area with a minimum width of eleven (11) feet including the width of the wall and sidewalk.

6.2.1.5 With approval of the Planning Commission, a meandering sidewalk may be constructed.

6.2.1.6 “Conceptual” plans must be approved by the Planning Commission prior to the submittal of landscape improvement plans.

6.2.2 Final Map Requirements

6.2.2.1 The following requirements must be satisfied prior to recordation of a Final Map:

a. The Developer shall form a “Landscape and Lighting” maintenance district.

b. The City shall approve detailed landscape and wall plans.

c. The Developer shall do either of the following:

1) Construct the landscape and irrigation system to the satisfaction of the City Engineer, and enter into a “Maintenance” agreement with the City securing a ninety (90) day maintenance period by the developer.

2) Enter into a separate “Landscape Improvement” agreement and post an improvement security to guarantee the installation of the landscaping and irrigation system to the satisfaction of the City Engineer.

6.2.3 Walls

6.2.3.1 Walls shall be six (6) foot masonry walls. Masonry wall may consist of the following:

a. Wood framed wall covered in stucco on both sides:

1) Structure to be approved by City Engineer.

2) Calculations shall be submitted to show wall will endure earth, wind, and seismic loading (as applicable).

3) Design must incorporate pressure treated wood and vapor barriers.

4) Appearance to be approved by Community Development Director

b. Cement Masonry Unit (CMU) Wall

1) CMU block walls with grouted cells and reinforcement in conformance with City Standard Detail 6.11.

2) Calculations shall be submitted to show wall will endure earth, wind, and seismic loading (as applicable).

3) Type of wall and cap shall be as approved by the Planning Commission with the conceptual plans for the development.

4) Actual cement masonry unit used for construction shall be approved by the Planning Commission prior to construction.

c. Retaining Walls: Any retaining walls shall be designed by a Registered Civil Engineer. Retaining walls shall consist of the following:

1) CMU block walls with grouted cells and reinforcement in conformance with City Standard Detail 6.12. Pilasters are required.

2) Structure to be approved by City Engineer. Calculations shall be submitted to show wall will endure earth, wind, and seismic loading (as applicable).

3) Backfill drainage facilities shall be provided for retaining walls subject to more than two (2) feet of retained earth

4) Wood shall not be used to retain earth of any depth.

d. Vehicular or pedestrian gates provided for walls designed per this section shall be galvanized steel framed gate with facing that is complimentary to the adjacent wall and approved by the City.

6.2.4 Sidewalks

6.2.4.1 Sidewalks within landscaped areas shall conform to the provisions of Section 5.3.14.

6.2.4.2 Meandering sidewalks shall be designed so as to conform to the approved conceptual plans for the development.

6.2.4.3 Minimum width shall be five (5) feet.

6.2.4.4 Slope and accessibility requirements of the American with Disabilities Act (ADA) will be adhered to.

6.2.5 Landscaping

6.2.5.1 Trees and shrubs shall be placed in sufficient quantity so as to fill the landscape area when the shrubs and trees mature. Additionally, a sufficient quantity shall be placed directly in front of walls so as to deter graffiti vandals. Sufficient shall be as determined by the City Engineer.

6.2.5.2 Where shrubs or trees are to be planted, the sight distance lines, conforming to City Standard Detail 5.23, shall be overlaid on the plans to show that the plants and other improvements do not interfere with clear zones. See Section 5.3.5, “Line of Sight”, for sight distance requirements.

6.2.5.3 Shrubs and/or trees shall also be overlaid on lighting plans to evaluate the effect on lighting.

6.2.5.4 Developer shall submit to the City Engineer for approval a soil nutrient report. This requirement may be waived if the City has on file acceptable information to indicate that it is not warranted. The report shall contain recommendations for soil amendments and fertilizers, as well as a statement of the soil's suitability for the purpose intended.

6.2.5.5 Small patches of turf which will not lend themselves to maintenance with riding mowers are not acceptable.

6.2.5.6 Encouraged are the use of ground cover plants with a few shrubs. The use of trees will be allowed where the trees or their overhang do not interfere with the sight distance at intersections. Trees shall not be a type which have a lot of surface roots or drop fruit, or are a maintenance problem. The use of root guards is prohibited. The species of any trees planted within five feet of a permanent structure (street, curb sidewalk, or wall) shall be approved by the City Engineer prior to construction. All plants shall be tolerant of and readily adaptable to the climatic area in which they are to be planted. Trees which exceed a four (4) inch diameter trunk at 7 years growth shall not be placed in the right-of-way.

6.2.6 Irrigation System

6.2.6.1 Irrigation systems shall be designed for performance at 30 PSI.

6.2.6.2 PVC sleeves (Schedule 40) shall be used for both electrical and irrigation lines under concrete and pavement.

6.2.6.3 All electrical wiring, controls, and devices shall be U.L. listed, and so labeled. Other approval organizations will be subject to review and approval prior to installation.

6.2.6.4 The landscape system shall be designed to function without the use of pumps.

6.2.6.5 Sprinkler heads shall be selected to limit the amount of over spray on walls, sidewalks, or pavement.

6.2.6.6 All sprinklers and quick coupling valves shall be installed using double swing joints. All sprinklers shall be Marlex and quick coupling valves shall be Schedule 40 PVC.

6.3 MATERIAL STANDARDS

6.3.1 PVC Pipe and Fittings

6.3.1.1 Pressure Main Line Piping and Fittings: Sizes two and one half (2-1/2) inches or larger shall be PVC Class 200 ring-tite or approved equal.

6.3.1.2 Pressure Main Line Piping and Fittings: Sizes two (2) inches and smaller shall be Schedule 40 PVC.

6.3.1.3 Non-pressure laterals shall be minimum thickness Schedule 40 P.V.C.

6.3.1.4 PVC nipples shall be schedule 80 with molded threads.

6.3.1.5 All pipe and fittings shall conform to specific requirements as follows:

a. P.V.C. Pipe: Manufactured from virgin polyvinyl chloride compound in accordance with ASTM D1784 or ASTM D2241, Cell classification 12454B.

b. PVC Fittings (thread): Standard weight, schedule 40, side gated, injection molded PVC complying with ASTM D1784, cell classification 13454B, including threads when required.

c. Solvent cement and primer for PVC solvent-weld pipe and fittings shall be of type and installation method prescribed by the pipe manufacturer.

6.3.2 Electrical (Low Voltage)

6.3.2.1 Wiring sizing shall be a minimum of #14 direct burial AWG-UF, 600 volt wire, insulation thickness 3/64 inch, utilizing low density high molecular weight polyethylene insulation. An extra wire for every six (6) stations shall be looped in each valve box and housed in a box.

6.3.2.2 Wiring shall be color coded with the common wire to be white and all others in different colors. The color-coding shall be shown on the submitted improvement plans and approved by the City.

6.3.2.3 Splices shall be waterproofed using Rain-Bird, Pen Tite, or other approved equal connectors. All splices shall be contained in a pull box and clearly marked on the lid.

6.3.2.4 All wiring placed under concrete or pavement shall be placed in a sleeve with pull boxes at each end. Irrigation wiring shall be clearly marked on all pull box lids.

6.3.3 Water Service Connection

6.3.3.1 A City standard 2" or larger water service connection conforming to Division Three of this manual shall be the type of service connection used for landscaping.

6.3.4 Backflow Prevention Units

6.3.4.1 Backflow preventers shall be designed to operate on a "reduced pressure" principle. Backflow preventers shall be installed in accordance with the latest edition of the Manual of Cross Connection and Control and City Standard Detail 6.3.

6.3.4.2 Backflow preventers shall be installed, tested in place, and certified by a certified backflow preventer tester prior to being placed into full time operation

6.3.4.3 Backflow preventers shall be installed in a landscaped area adjacent to the service connection.

6.3.5 Automatic Controller

6.3.5.1 All automated controllers shall be Maxicom ready and clearly identified so on submitted plans.

6.3.5.2 Automatic controllers shall be the fully automatic operation type capable of independently operating the number of stations indicated on the design plans. The City Engineer may require additional capacity if landscaping can be continued with another project.

6.3.5.3 Controller shall be Rainbird ESP Sat; each valve shall be controlled by a separate station. Controllers will require wireless communication.

6.3.5.4 Wall mount type in a housing with locking hinged cover.

6.3.5.5 Fuse and chassis ground all controller components.

6.3.5.6 The controller shall be mounted inside a stainless steel or aluminum, vandal resistant enclosure with a pre-drilled backboard with 117 volt duplex outlet. Metal conduit shall run from the 117 volt supply to the controller housing. All power within the housing shall be properly phased. The enclosure shall be LeMeur EM 100. See City Standard Detail 6.6.

6.3.5.7 The electric meter may be installed in the above cabinet or a separate, approved vandal-resistant enclosure.

6.3.6 Remote Control Valves

6.3.6.1 Valve type shall be spring-loaded, packless diaphragm activated, normally closed type with plastic body, equipped with adjustable flow control. Valves shall be Rain Bird PEB.

6.3.6.2 Installation of remote control valves shall be per City Standard Detail 6.4.

6.3.6.3 Valve solenoid shall be 24 volt AC, 45 watt maximum, 500 milliamp maximum surge, corrosion-proof, stainless steel construction, epoxy encapsulated to form a single integral unit.

6.3.6.4 Provide bleeder valve to permit operation in the field without power at the controller.

6.3.6.5 All valves shall be installed with schedule 80 unions to provide for easy maintenance.

6.3.6.6 Identification tags shall be attached to each remote control valve, showing the number that corresponds with the controller sequence. Tags shall be plastic Christy-brand with the station number stamped with ½ inch letters.

6.3.7 Gate Valves

6.3.7.1 Gate valves three (3) inches and smaller: ASTM B62 brass body, 150 pound saturated steam rated; with screwed joints; non-rising stem; screwed bonnet, solid disc. Provide with handwheel.

6.3.7.2 All gate valves shall be installed with schedule 80 PVC unions to allow easy removal and placed in an approved valve box.

6.3.8 Small Lawn Sprinkler Heads

6.3.8.1 Pop up sprinkler heads shall be used in lawn or turf areas.

6.3.8.2 Heads shall have screw adjustments that adjust the amount of water from the sprinkler nozzle.

6.3.8.3 Nozzles shall rise a minimum of six (6) inches.

6.3.8.4 Small lawn sprinklers shall be Rainbird Model 1800.

6.3.8.5 See City Standard Detail 6.7.

6.3.9 Rotary Sprinkler Heads

6.3.9.1 Rotary sprinkler heads shall be gear driven with minimum six (6) inch pop-up sprinkler heads.

6.3.9.2 Part circle heads shall have variable arc setting capability.

6.3.9.3 Rotary sprinkler heads shall be as follows:

a. For large areas (as determined by manufacturer recommendations) use Rainbird Falcon Rotors.

b. For mid-sized areas (as determined by manufacturer recommendations) use Rainbird Model 5000 Rotors.

c. For small areas (as determined by manufacturer recommendations) use Rainbird Model3500 Rotors.

6.3.9.4 See City Standard Detail 6.7.

6.3.10 Small Shrubbery Sprinkler Heads

6.3.10.1 Pop up sprinkler heads shall be used in shrubbery areas.

6.3.10.2 Heads shall have screw adjustments that adjust the amount of water from the sprinkler nozzle.

6.3.10.3 Nozzles shall rise a minimum of twelve (12) inches.

6.3.10.4 See City Standard Detail 6.7.

6.3.11 Quick Coupling Valves

6.3.11.1 Valves shall be of heavy-duty, brass construction, with stainless steel internal valve spring, using a 3/4-inch valve key, Rainbird 33 or equal, and shall have a locking rubber cover marked non-potable.

6.3.11.2 Quick coupling valves shall be spaced no more than 100 feet apart or 50 feet from either end of landscape sections.

6.3.11.3 All quick coupling valves shall be installed in approved round valve boxes in accordance with City Standard Detail 6.5.

6.3.12 Valve Boxes

6.3.12.1 Valve boxes shall be fabricated from a durable plastic material resistant to weather, sunlight and chemical action of soils.

6.3.12.2 Gate valve boxes shall be round plastic boxes with flex lock covers, AMETEK, BROOKS, CARSON, or approved equal.

6.3.12.3 Remote control valve boxes shall be rectangular plastic boxes, AMETEK, BROOKS, CARSON, or approved equal, with bolt-down lids.

6.3.12.4 See City Standard Detail 6.4.

6.3.13 Installation

6.3.13.1 All irrigation installations shall be in accordance with City Standards, the latest edition of the California Plumbing Code, manufacturer's recommendation, and as directed by the City Engineer.

6.3.13.2 The Developer shall notify the Department of Public Works prior to the installation of the irrigation system and landscaping.

6.3.13.3 Irrigation system improvements shall be installed in accordance with the following guidelines, City Standard Detail 6.2, and as directed by the city inspectors.

a. All plastic pipe and fittings shall be installed and backfilled in accordance with manufacturer's instructions and the approved details.

b. All lines shall have a minimum horizontal clearance of six (6) inches from each other and from lines of other trades. Parallel lines shall not be installed directly over one another.

c. Provide minimum coverage as follows:

1)	Pressure supply lines (two and one half - (2½) inches and smaller):	18 inches
2)	Pressure supply lines (three (3) inches and larger):	30 inches
3)	Non-pressure lines (lines under pressure only during operation):	12 inches
4)	Control wire:	18 inches

d. All lines placed under paving or concrete shall be contained in a schedule 40 PVC sleeve. The size of the sleeve shall 2 times the diameter of the pipe passing through it. All wire and pipes under paving shall be at least 30 inches deep, as measured from top of pavement.

e. All above-ground piping 6 inches in diameter and smaller shall be insulated against freezing.

6.4 CONSTRUCTION STANDARDS

6.4.1 General

6.4.1.1 The Developer shall maintain all irrigation and landscaping for a period of one year after receiving written notification, by the City Engineer, that the improvements are complete per the Plans, and Development Agreement.

6.4.1.2 The Developer shall pay all costs for water and electricity until the end of the one-year maintenance period.

6.4.1.3 At the discretion of the City Engineer, the maintenance period may be extended if over 15% of the shrubs or trees were replaced during the one-year period.

6.4.2 Testing and Adjustment

6.4.2.1 All control equipment shall be inspected by a certified Maxicom Control Technician in the presence of the City prior to acceptance by the City.

6.4.2.2 The Contractor shall adjust all sprinkler heads and valves for optimum performance and to minimize over spray onto walks and roadways.

6.4.2.3 Testing of Irrigation System:

a. Test all pressure lines under hydrostatic pressure of 150 pounds per square inch, and prove watertight, in the presence of the City Inspector.

b. Testing of pressure main lines shall occur prior to installation of electric control valves, quick couplers or any other equipment that might prevent a proper test from being performed.

c. All piping under paved areas shall be tested to the satisfaction of the City Inspector prior to paving. Pressure in lines shall be sustained for not less than two (2) hours. If leaks develop, replace joints and repeat test until entire system is proven watertight.

6.4.3 Acceptance

6.4.3.1 Prior to the Maintenance District taking over the landscape improvements, the Developer shall replace all plants which are not in a healthy condition, readjust sprinklers and make all necessary repairs to the system, as directed by the City Engineer.

6.4.3.2 At the end of the 12 week maintenance period and after receiving the written Acceptance by the City, the Developer shall be responsible for notifying the utility companies by letter to arrange for the utility meters to be transferred to the City. Copies of the notification shall be sent to the City.

6.4.4 Manuals and Charts

6.4.4.1 Controller Charts:

a. Provide three controller charts for each controller installed, one shall be attached in the controller box, and the other 2 turned over to the City in the Operation and Maintenance Manuals submittal. Controller charts shall be provided in laminated 11-inch by 17-inch sheets.

b. The chart shall indicate the area controlled (color coded for easy reference) by the automatic controller.

6.4.4.2 Operation and Maintenance Manuals:

a. Prepare and deliver prior to completion of construction, two (2) hard cover three ring binders containing the following information:

1) Index sheet stating landscape Contractor's address and telephone number, list of equipment with contacts for manufacturer's representative.

2) Catalog and part sheets on all material and equipment installed.

3) Complete operating and maintenance instructions on all major equipment.

4) “Record Drawings” of complete irrigation system.

6.5 GENERAL AND CONSTRUCTION NOTES

General Notes

General notes shall include all necessary notes to convey the intent of the City’s drainage and grading standards, the project at hand, and as directed by the City Engineer. They shall include, but not be limited to the following.

1. 48 hour inspection notice - Prior to the start of any phase of construction, the Office of the City Engineer shall be given at least 48 hours notice.

2. Contractor shall call Underground Service Alert (USA) and the City of Tehachapi Department of Public Works at least two (2) working days prior to the start of construction to mark the locations of existing utility lines.

3. Contractor shall obtain all necessary permits before start of construction. A permit shall be obtained from the City for all work to be performed in City right-of-way.

4. The locations of existing utilities and underground pipelines shown on these plans are approximate only. The contractor shall determine the exact location of all existing utilities and underground pipelines before commencing work. Contractor assumes all liability for any and all damages to existing utilities occasioned by his failure to exactly locate, preserve, and protect any and all underground utilities and pipelines.

5. Contractor agrees that they shall assume sole and complete responsibility for job site conditions during the course of construction of this project, including the safety of all persons and property; that this requirement shall apply continuously and not be limited to normal working hours; that the contractor shall defend, indemnify, and hold the Developer, Design Engineer, and the City harmless from any and all liability, real or alleged, in connection with the performance of work on this project, excepting the liability arising from the sole negligence of the Developer, Design Engineer, or City.

6. All construction work shall be performed in accordance with City of Tehachapi Subdivision and Development Standards, the recommendations contained in the preliminary soils report for the development, and as directed by the Design Engineer and approved by the City Engineer.

7. The Contractor shall provide the Design Engineer with “As-built” plans upon completion of the work. The cost thereof shall be paid by the Contractor. No building permit will be issued by the City of Tehachapi until such a time as the finished grading has been certified by the Design Engineer and “As-built” plans submitted to the City of Tehachapi Engineering Department.

8. Approval of these plans does not relieve the Developer of responsibility for correction of mistakes, errors or omissions by same. If during the course of construction of these improvements, public interest requires a modification or departure from the City’s Specifications, Details, or these Improvement Plans, the City Engineer shall have authority to require in writing such modification or departure and specify the manner in which the same is done.

9. The design engineer shall exercise sufficient supervisory control during construction to ensure compliance with the plans, specifications, and codes with his purview.

Sample Standard Landscaping Notes

1. There shall be no substitutions or deletions of plant materials without the express written consent of the City Engineer and the Planning Commission.

2. All landscaping plant materials and related infrastructure shall be installed in accordance with the City’s Standards for Landscaping and as directed by the City Engineer.

3. Backflow preventers shall be installed, tested, and certified and functioning correctly prior to being placed into service.

DIVISION SEVEN – STANDARDS FOR EROSION AND SEDIMENT CONTROL

7.1 GENERAL

7.1.1 Permits

7.1.1.1 The Developer shall comply with the existing California State Water Resources Control Board (SWRCB) Construction General Permit 2009-0009-DWQ as amended by the most recent revision. Specifically, this includes the Development and implementation of a Storm Water Pollution Prevention Plan (SWPPPP) and Monitoring Program (MP).

7.1.1.2 Disposal of construction water from operations such as groundwater dewatering and water used for testing, disinfecting, and flushing pipelines shall comply to all applicable California Regional Water Quality Control Board (CRWQCB) National Pollutant Discharge Elimination System (NPDES) orders, including but not limited to NPDS No. CAG995001.

7.1.2 General Construction Storm Water and Water Discharge Permits

7.1.2.1 The Developer shall read and be familiar with all requirements contained in the applicable Permit necessary to develop an SWPPP and MP. Attention is directed to the publication entitled "Storm Water Quality Handbooks" which have been prepared by the state and should assist the Contractor in the development of the SWPPP. Copies of the handbooks may be purchased by writing the Department of Transportation, Material Operations Branch, Publication Unit, 1900 Royal Oaks Drive, Sacramento, California 95815, telephone 916/445-3520.

7.1.2.2 The Developer shall note that compliance with the requirements contained in the applicable Permit may require the use of erosion and sedimentation control procedures outside the limits of immediate construction activity.

7.1.3 Notice of Intent

The applicable Permit will require the Developer to file a Notice of Intent (NOI) with the SWRCB or the CRWQCB. A copy of this NOI must be included in the SWPPP.

7.1.4 Submittals

Submit the required SWPPP, MP, and NOI for review and acceptance by the City.

7.2 REQUIRED DOCUMENTS

7.2.1 Storm Water Pollution Prevention Plan

The Developer shall operate an SWPPP in accordance with the requirements specified in the applicable permit.

7.2.2 Monitoring Program

The Developer shall develop an MP in accordance with the requirements specified in the applicable permit.

7.2.3 Notice of Intent

The Developer shall develop a NOI in accordance with the requirements specified in the applicable permit.

7.2.4 Plans and Material Specifications

The Developer shall generate and submit plans and product specifications for use in his development and implementation of the SWPPP and MP.

7.3 REQUIRED CONTROLS

7.3.1 General

Best Management Practices (BMPs) described in this section shall be modeled after those presented in the Caltrans, Storm Water Quality Handbooks, Project Planning and Design Guide, SWPPP and WPCP Preparation Manual, Construction Site Best Management Practices Manual.

7.3.2 Disturbed Soil Area (DSA) Definition

7.3.2.1 Disturbed soil areas (DSAs) are areas of exposed, erodible soil that are within the construction limits and that result from construction activities. The following are not considered DSAs:

a. Areas where soil stabilization, erosion control, highway planting, or slope protection are applied and associated drainage facilities are in place and functional.

b. Roadways, construction roads, access roads or contractor's yards that have been stabilized by the placement of compacted subbase or base material or paved surfacing.

c. Areas where construction has been completed in conformance with the contract plans and permanent erosion control is in place and functional.

7.3.2.2 Erosion control is considered functional when a uniform vegetative cover equivalent to 70 percent of the native background vegetation coverage has been established or equivalent stabilization measures have been employed.

7.3.3 Active Areas and Non-active Areas

7.3.3.1 Active Areas are construction areas where soil-disturbing activities have already occurred and continue to occur or will occur during the ensuing 21 days.

7.3.3.2 Non-Active Areas are construction areas (formerly active areas) that will be idle for at least 21 days.

7.3.3.3 The Developer will conduct a review of the existing active areas on a regular basis to determine if a non-active status should be applied to some DSAs.

7.3.4 Reserved

7.3.5 Disturbed Soil Area Limitations

7.3.5.1 Exposed erodible earth which may cause water pollution shall not exceed 10 acres (~440,000 sf) for each separate location, operation, or spread of equipment before either temporary or permanent erosion control measures are in place.

7.3.5.2 The Contractor shall not expose a total area of erodible earth, which may cause water pollution, exceeding 5 acres (~220,000 sf) for each separate location, operation, or spread of equipment before either temporary or permanent erosion control measures are in place when precipitation is likely or imminent within the next 21 days.

7.3.5.3 Determination of likely or eminent precipitation is the Developer's responsibility. However, the Office of the City Engineer shall have the authority to require the provisions of 7.3.5.2 at any time.

7.3.6 Disturbed Soil Area Control Implementation Guidelines

7.3.6.1 Temporary control practices (as required in Detail 7.1) shall be performed on non-active DSAs within 14 days from the cessation of soil-disturbing activities or one day prior to the onset of precipitation, whichever occurs first.

7.3.6.2 Temporary control practices for active DSAs (as required in Detail 7.1) shall be performed prior to the onset of precipitation and throughout each day for which precipitation is forecasted.

7.3.6.3 For non-active DSAs, limit the erosive effects of storm water flow on slopes by implementing Best Management Practices (BMPs) such as fiber rolls to break up the slope lengths as follows:

a. Slope inclination 1:4 (V:H) and flatter: BMPs shall be placed on slopes at intervals no greater than 6m.

b. Slope inclination between 1:4 (B:H) and 1:2 (V:H): BMPs shall be placed on slopes at intervals no greater than 4.5 m.

c. Slope inclination 1:2 (B:H) or greater: BMPs shall be placed on slopes at intervals no greater than 3 m.

7.3.6.4 For non-active DSAs, permanent erosion control shall be applied to areas deemed complete during the project's defined seeding window.

7.3.6.5 Provide construction site BMPs in addition to those specified in Tables 2-2 and 2-3 to convey concentrated flows in a non-erodible fashion.

7.3.7 Wind Erosion Controls

Wind erosion controls shall be considered year-round for all disturbed soils on the project site that are subject to wind erosion and when significant wind and dry conditions are anticipated during construction of the project.

7.3.8 BMP Inspections

The BMPs deployed on construction sites will be inspected on the frequency as determined in the Construction General Permit 2009-0009-DWQ as amended by the most recent revisions. Improperly installed or damaged BMPs shall be corrected immediately and no later than the onset of forecasted rain events.

7.4 EXECUTION

7.4.1 General

7.4.1.1 Develop and submit the SWPPP and MP for acceptance by the City prior to commencement of construction activities.

7.4.1.2 Comply with the conditions identified in the applicable permit that apply to the work being performed.

7.4.1.3 The Developer shall be responsible for the compliance of his personnel and contractors with the SWPPP and for cooperation in the implementation of the MP.

7.4.1.4 Keep the SWPPP on site during construction activity. Make available upon request of a representative of the City, RWQCB, and/or other regulatory agency.

7.4.1.5 Amend the SWPPP whenever there is a change in construction or operations which may affect the discharge of significant quantities of pollutants to surface waters, groundwaters, or a municipal storm sewer system.

7.4.2 Storm Water Pollution Prevention Plan

The SWPPP shall provide a description of potential sources which are likely to add significant quantities of pollutants to storm water discharges or which may result in non-storm water discharges from the construction site. A description of the items shall be included in the Construction General Permit.

7.4.3 Monitoring Program

7.4.3.1 The Developer shall generate an MP as required in the Construction General Permit.

7.4.3.2 The Developer will implement the MP and will be responsible for monitoring his contractor's actions and the activities of those responsible to the Contractor.

7.4.3.3 The Developer shall allow representatives of the City, RWQCB, and/or other regulatory agencies to enter upon the construction site, inspect the construction site for compliance, and sample and monitor the construction site discharges.

7.4.3.4 The MP will extend past the completion date of any project. The Developer's responsibilities for the MP will cease upon acceptance by the City of all work under the agreement.

7.4.4 Duty to Comply

7.4.4.1 The Developer shall comply with all conditions identified in the applicable permit and the SWPPP. Nonadherence with the conditions specified in the permit may constitute a violation of the Clean Water Act and the Porter-Cologne Water Quality Control Act and may be grounds for enforcement action by the RWQCB.

7.4.4.2 The Developer shall take all reasonable steps to minimize or prevent any discharge in violation of the permit.

7.4.5 Compliance Certification

7.4.5.1 The Developer shall certify in writing to the City annually and at the completion of construction, if it occurs before the next annual report, that its construction activity is and has been in compliance or has been modified to comply with the requirements of the applicable permit and the SWPPP.

7.4.5.2 If the Developer determines that he cannot certify compliance with any of the permit and SWPPP requirements, he shall notify the City Engineer immediately. The notification shall identify the type of noncompliance, describe the actions necessary to achieve compliance, and include a time schedule when compliance will be achieved. Each noncompliance notification to the City shall be submitted within 15 days of identification of the event by the Developer.

DIVISION EIGHT
PLAN REVIEW PROCESS

8.1 PLAN PREPARATION

8.1.1 Preliminary Investigation and Fees

8.1.1.1 The Developer shall meet with the City at the earliest possible date to determine whether or not the property to be developed will require municipal improvements to be constructed by the Developer. At this time, the availability of existing sewer and waterlines may also be reviewed. It shall be the responsibility of the City to determine whether or not the City can serve the proposed area. In some cases, a preliminary feasibility report may be necessary to establish whether or not the City can serve the proposed development. The Developer shall pay the City for such a study and report.

8.1.1.2 Plan Check and Inspection fees required to offset the City's cost for checking of improvement plans and inspection of construction shall be deposited with the City prior to City checking of any improvement plans and prior to start of construction, respectively. The amount of Plan Check and Inspection Fees shall be based upon the total estimated construction cost of the improvements. Said construction cost estimate shall be reviewed by the City Engineer.

8.1.2 Improvement Plan Preparation and Submittal Process

8.1.2.1 The design data, calculations, and the construction plans for proposed improvements shall be submitted by the Developer to the City Engineer, for review and approval prior to construction,

a. The Developer shall submit a drainage study together with a conforming grading plan for the proposed drainage system to the City Engineer, for review and approval prior to grading construction of any improvements.

b. Drainage studies shall include calculations, signed by a registered civil engineer, defining development hydrology (including any applicable off-site hydrology), and pipe sizes for the Development.

c. Retaining wall plans must be accompanied by structural calculations signed by a Registered Civil Engineer. The landscape portion of the plans must be signed by a registered landscape architect (not required for small landscaping projects as determined by the Community Development Director).

8.1.2.2 An Engineer's Estimate, based on "unit" prices approved by the City Engineer, shall be submitted and approved for the determination of plan check and inspection fees.

8.1.2.3 Three (3) sets of “black-lines” shall be submitted for plan checking and one electronic set via PDF.

8.1.2.4 Plans are subject to multiple checks until plans are satisfactory to the City Engineer.

8.1.2.5 Plan Check Fees

a. The initial plan check fee shall cover the costs associated with up to three plan submittals.

b. If the plans are not approved upon the third submittal, the Developer shall pay additional plan check fees on a time and materials basis until the review is complete. An itemized bill of this additional time will be sent to the Developer within 60 days following the completion of the review.

c. Payment of all additional plan check fees will be required prior to Acceptance by the City.

8.1.2.6 Improvement plans being submitted for “Final Signature” shall submit three (3) sets of “black-lines” and one electronic copy via PDF.

8.1.2.7 All plans must be prepared under the direct supervision of a registered civil engineer licensed to practice in the State of California. This requirement must be attested to by the engineer’s seal and signature on all sheets of the Plans.

8.1.2.8 Separate plan and profile drawings will be required for streets, sewer, and drainage improvements and plan drawings will be required for water plans. Profile drawings may also be required for water improvements if determined necessary by the City Engineer.

8.1.2.9 The density of the grid on profiles shall be such that the Plans shall be easily interpreted.

8.1.2.10 Horizontal scale for street and drainage plans shall be 1-inch equals 20 feet.

8.1.2.11 Horizontal scale for water and sewer plans shall be 1-inch equals 50 feet.

8.1.2.12 Vertical scales shall not be smaller than 1-inch equals 5 feet.

8.1.2.13 Any deviation from these plan scale requirements shall be approved by the City.

8.1.2.14 Unless approved by the City Engineer, all landscaping plans, water plans, sewer plans, and street and drainage plans shall be prepared as a separate set of plans and not combined.

8.1.2.15 All improvement plans shall contain the minimum information as designated in the improvement plan checklists for each type of improvement.

8.1.2.16 Beginning with the first submittal, the Developer is to be satisfied that the plans and calculations are completed and ready for construction. Therefore, plans and calculations will not be received for review without the appropriate professional seal and signature.

8.1.3 Development Submittal Requirements

8.1.3.1 All new developments (including residential, commercial, and industrial) submitted to the City of Tehachapi for plan review shall be required to submit all elements of the project subdivision and improvement plans as described above together in the appropriate Submittal Package sequence shown below before plan review will begin.

8.1.3.2 All plans must be properly stamped and signed as required by these standards. No plan review will commence on any development Submittal Package which is deemed incomplete by the City Engineer. The submittal package shall contain the minimum elements (as required) as outlined below for residential, commercial, and industrial developments.

8.1.3.3 Residential Developments (Submittal Package No. 1)

a. Plan Checking Fees per the City's Fee Schedule.

b. Tentative Parcel or Tract Map.

1) (3) sets of black line maps stamped and signed by a California Licensed Land Surveyor.

2) (3) sets of closure calculations.

3) (3) copies of the preliminary title report not older than (30) days relative to the Submittal Package date.

4) (1) set of record of survey maps used to compile tentative map.

8.1.3.4 Residential Development (Submittal Package No. 2)

a. Plan Checking and Inspection Fees per the City's Fee Schedule.

b. Parcel or Tract / Final Map.

1) (3) sets of black line maps stamped and signed by a California Licensed Land Surveyor.

2) (3) sets of closure calculations.

3) (3) copies of the preliminary title report not older than (30) days relative to the Submittal Package date.

4) Subdivision Guarantee not older than thirty days from expected day of recording.

5) County of Kern Assessor's Tax Estimate.

6) Tax Collectors Certificate.

c. (3) sets of soil reports stamped and signed by a California Licensed Geotechnical Engineer.

d. (3) black line sets of rough grading plans stamped and signed by a California Licensed Civil Engineer.

e. (3) sets of hydrology reports stamped and signed by a California Licensed Civil Engineer.

f. (3) black line sets of drainage / storm drain improvement plans signed and stamped by a California Licensed Civil Engineer.

g. If deemed necessary by the City Engineer, (2) sets of water system demand analysis stamped and signed by a California Licensed Civil Engineer.

h. (3) black line sets of water system improvement plans stamped and signed by a California Licensed Civil Engineer.

i. If deemed necessary by the City Engineer, (2) sets of sewer system demand analysis stamped and signed by a California Licensed Civil Engineer.

j. (3) black line sets of sewer system improvement plans stamped and signed by a California Licensed Civil Engineer.

k. (3) black line sets of street improvement (onsite and offsite) plans stamped and signed by a California Licensed Civil Engineer.

l. (3) sets of pavement calculations stamped and signed by a California Licensed Civil Engineer.

m. (3) sets of wall plans stamped and signed by a California Licensed Civil Engineer.

n. (3) sets of wall structural calculations stamped and signed by a California Licensed Civil Engineer.

o. (3) black line sets of landscaping and irrigation plans stamped and signed by a Licensed Landscape Architect. Design of landscaping and irrigation system by a Licensed Landscape Architect may be waived by the Community Development Director. These plans will be reviewed separate from the other improvement plans by the Community Development Department.

p. (3) sets of the development improvements engineer's estimate stamped and signed by a California Licensed Civil Engineer.

q. (3) sets of the project's storm water pollution prevention plan conforming to the requirements of the State Water Resources Control Board Construction General Permit 2009-0009-DWQ as amended by the most recent revision.

8.1.3.5 Residential Developments (Submittal Package No. 3)

a. Reserved

b. (3) black line sets of the required public improvement plans as outlined in Section 8.1.3.4 for the City's records.

c. (2) original sets of security bonds and insurance documents.

8.1.3.6 Commercial / Industrial Developments (Submittal Package No. 1 shall include only those elements applicable to any public improvements as required by the City. Developer's/Owner's Engineer shall provide on-site and off-site improvement plans separately as required by the City.)

a. Plan Checking and Inspection Fees per the City's Fee Schedule.

b. Parcel or Tract / Final Map.

1) (3) set of black line maps stamped and signed by a California Licensed Land Surveyor.

2) (3) sets of closure calculations.

3) (3) copies of the preliminary title report not older than (30) days relative to the Submittal Package date.

4) Subdivision Guarantee not older than thirty days from expected day of recording.

5) County of Kern Assessor's Tax Estimate.

6) Tax Collectors Certificate.

c. (3) sets of soil reports stamped and signed by a California Licensed Geotechnical Engineer.

d. (3) black line sets of rough grading plans stamped and signed by a California Licensed Civil Engineer.

e. (3) sets of hydrology reports stamped and signed by a California Licensed Civil Engineer.

f. (3) black line sets of drainage / storm drain improvement plans signed and stamped by a California Licensed Civil Engineer.

g. If deemed necessary by the City Engineer, (2) sets of water system demand analysis stamped and signed by a California Licensed Civil Engineer.

h. (3) black line sets of water system improvement plans stamped and signed by a California Licensed Civil Engineer.

i. If deemed necessary by the City Engineer, (2) sets of sewer system demand analysis stamped and signed by a California Licensed Civil Engineer.

j. (3) black line sets of sewer system improvement plans stamped and signed by a California Licensed Civil Engineer.

k. (3) black line sets of street improvement (onsite and offsite) plans stamped and signed by a California Licensed Civil Engineer.

l. (3) sets of pavement calculations stamped and signed by a California Licensed Civil Engineer.

m. (3) sets of wall plans stamped and signed by a California Licensed Civil Engineer.

n. (3) sets of wall structural calculations stamped and signed by a California Licensed Civil Engineer.

o. (3) black line sets of landscaping and irrigation plans stamped and signed by a Licensed Landscape Architect. Design of landscaping and irrigation system by a Licensed Landscape Architect may be waived by the Community Development Director. These plans will be reviewed separate from the other improvement plans by the Community Development Department.

p. (3) sets of the development improvements engineer's estimate stamped and signed by a California Licensed Civil Engineer.

q. (3) sets of the project's storm water pollution prevention plan conforming to the requirements of the State Water Resources Control Board Construction General Permit 2009-0009-DWQ as amended by the most recent revision.

8.1.3.7 Commercial / Industrial Developments (Submittal Package No. 3)

a. Reserved

b. (3) black line sets of the required public improvement plans as outlined in Section 8.1.3.7 for the City's records.

c. (2) original sets of security bonds and insurance document.

8.1.3.8 Other submittals such as Parcel Map Waivers, Parcel Map Mergers, and Lot Line Adjustments shall submit the following items for each.

a. (2) copies of Exhibits "A" (Map) and "B" (Legal Description) stamped and signed by a California Licensed Land Surveyor. Exhibit A shall show existing and proposed boundaries.

b. (2) sets of closure calculations.

c. (2) copies of the preliminary title report not older than (30) days relative to the Submittal Package date.

d. (1) set of record of survey maps used to compile the exhibits.

e. Original executed Certificate of Compliance.

8.1.4 Variances

8.1.4.1 Variances to these standards will be granted when deemed necessary by the City Engineer

8.1.4.2 If an applicant wishes to request a variance, he/she will do so in writing along with the first plan submission. Justification for the variance shall be included with the request.

8.1.4.3 Variances will not be granted on the basis of ease of design or for reasons of monetary benefit to the developer.

8.1.4.4 The applicant is solely responsible for requesting a variance. If the applicant fails to request a variance as required above, and it is discovered at a later time (up until project acceptance, see 1.10), the applicant shall be solely responsible for correcting the deviation from these standards.

8.1.5 Record Drawings

8.1.5.1 During construction of the improvements, the Developer shall note deviations from the Plans on a set of the Plans specifically set aside for this purpose. Any changes shall be made to the originals (reproducibles) of the Plans with a suitable note stating that the originals are "Record drawings."

8.1.5.2 Record Drawings shall be submitted electronically via PDF for review. Prior to furnishing the "Record Drawings" to the City for acceptance, the Developer shall furnish the City with one electronic PDF set for review and acceptance. The City will give the Developer a written notice that the preliminary "Record Drawings" are to the satisfaction of the City and that the final "Record Drawings" shall now be reproduced and submitted to the City for records.

8.1.5.3 Upon City review and acceptance, the drawings shall be marked "Record Drawings" and sent electronically via PDF. The "Record Drawings" will become the property of the City prior to Acceptance of the work by the City.

8.1.6 Easements

8.1.6.1 Easements shall be obtained by the Developer prior to approval of the Plans. Easements shall be shown on the Plans.

8.1.6.2 An irrevocable offer of dedication for streets and/or alleys shall be made to the City on the form provided in these Improvement Standards.

8.1.6.3 Acceptance of any offer of dedication for street and/or alley right-of-way and access easement required as a condition of approval for any subdivision within the City shall be subject to the satisfactory completion of improvements, as specified in these Standards and the Municipal Code, within said rights-of-way and access easements.

8.1.7 Plan Approval

8.1.7.1 Approval of the Plans by the City shall not relieve the Developer of his responsibility to locate all existing utilities and facilities, design the proposed improvements and prepare plans in accordance with these Standards, and/or detect and correct any and all errors and omissions contained in the plans.

8.1.7.2 The City may require additional checking of improvement plans (with deposit of additional plan check fees) if start of substantial construction of the improvements does not begin within three months of approval of the Plans.

8.1.7.3 Plans shall be approved prior to start of construction of the improvements.

8.1.8 Permit Approval

8.1.8.1 Following plan approval and permit approval, the City shall receive the copyright to the improvement plans.

8.1.9 Pre-construction Conference

8.1.9.1 Following plan approval and upon receipt of a construction permit from the City, the applicant shall attend a pre-construction conference with City Staff.

8.1.9.2 The applicant shall submit a written request to the City Engineer for the meeting no less than 14 days prior to the anticipated construction commencement date.

8.1.9.3 The pre-construction meeting must be held prior to commencing construction.

8.1.9.4 The applicant shall have in attendance either themselves, or a representative of the applicant, and their contractor.

8.2 PLAN REVIEW CHECKLISTS

8.2.1 Grading and Drainage Plans

8.2.1.1 Grading and drainage construction plans shall contain all notes, details and specifications necessary to complete the proposed work. Maximum sheet size shall be 24" x 36". Project information shall include, but not be limited to the following:

8.2.1.2 Cover Sheet

- Project Title
- Vicinity Map
- Key Map drawn to a scale of 1" = 200' (approx)
- Engineer's Certificate with seal and license expiration date
- General Notes
- Special Notes
- Legend
- Bench Mark
- Basis of Bearing
- Sheet Index
- Total number of sheets
- Materials list - show Engineer’s Estimate of Quantities
- City Engineer’s Approval/Signature Block
- Developer’s name and address/Engineer’s address and contact person
- Engineer's Statement
- Import/Export Note

These Plans were prepared by me or under my supervision and to the best of my knowledge and belief comply with the City of Tehachapi ordinances and standards and include all improvement requirements of the advisory agency or other review boards.

Any errors, omissions, or deviations from these ordinances and standards encountered during construction shall be corrected and such corrections reflected on the Record drawings submitted to the City Engineer.

8.2.1.3 Plan Sheet(s)

- Scales on each sheet (1' = 20')
- North arrow
- Sheet names
- Lot Numbers
- Existing Ground Contours
- Flowline elevations at each property line
- Flowline grades
- Street & Right-of-way dimensions
- Pad Limit Line (setback line)
- Pad Elevations for each lot
- Cut and Fill Slopes
- Limits of Grading Operations
- Construction phasing limits shown
- Proposed Storm Drain System
- Existing underground utilities, pipes, and structures
- Proposed Block walls
- Proposed Siphons and Cross Gutters

8.2.1.4 Details Required

Grading and drainage plans shall contain all applicable grading and drainage construction City of Tehachapi standard details and material specifications as well as any other information that may not be included in these standards but is deemed necessary by the City Engineer.

8.2.2 Storm Drain Plans

8.2.2.1 General

Storm drain construction plans shall contain all notes, details and specifications necessary to complete the proposed work. For sake of simplicity, Storm Drain Plans can be combined with Sewer Plans whenever applicable. Maximum sheet size shall be 24" x 36". Project information shall include, but not be limited to the following:

8.2.2.2 Cover Sheet

- Project Title
- Vicinity Map
- Key Map drawn to a scale of 1" = 200' (approx)
- Engineer's Certificate with seal and license expiration date
- General Notes
- Special Notes
- Legend
- Bench Mark
- Basis of Bearing
- Sheet Index
- Total number of sheets
- Materials list - show Engineer’s Estimate of Quantities
- City Engineer’s Approval/Signature Block
- Developer’s name and address/Engineer’s address and contact person
- Engineer's Statement:

These plans and specifications were prepared by me or under my supervision and to the best of my knowledge and belief comply with the City of Tehachapi ordinances and standards and include all improvement requirements of the advisory agency or other review boards.

Any errors, omissions, or deviations from these ordinances and standards encountered during construction shall be corrected and such corrections reflected on the Record drawings submitted to the City Engineer.

8.2.2.3 Plan and Profile Sheet(s)

- Horizontal and vertical scales on each sheet (1'" = 50' and 1" = 10' maximum)
- North arrow
- Storm drain line location relative to centerline or property line
- Pipe size and slope
- Relation to existing or proposed pipes, utilities, etc. - show by cross sections with verified depths
- Required utility separations
- Lateral size to catch basins
- Stationing (centerline) - from south to north and west to east; coincident with street stationing; show 100 foot interval ticks on street centerline
- Manhole locations
- Conforms to master drainage plan (if applicable)
- Connection to existing storm drain lines or structures
- Construction phasing limits shown

8.2.2.4 Details Required

Storm drain plans shall contain all applicable storm drain construction City of Tehachapi standard details and material specifications as well as any other information that may not be included in these standards but is deemed necessary by the City Engineer.

8.2.2.5 Studies Required

A drainage study prepared by the Developer's engineer shall be submitted to the City with the grading, drainage, and storm drain improvement plans for review and approval. Drainage study methodology shall be as designated in these standards.

8.2.3 Sewer Plans

8.2.3.1 General

Sewer construction plans shall contain all notes, details and specifications necessary to complete the proposed work. Maximum sheet size shall be 24" x 36". Project information shall include, but not be limited to the following checklist:

8.2.3.2 Cover Sheet

- Project Title
- Vicinity Map
- Key Map drawn to a scale of 1" = 200' (approx)
- Engineer's Certificate with seal and license expiration date
- General Notes
- Special Notes
- Legend
- Bench Mark
- Basis of Bearing
- Sheet Index
- Total number of sheets
- Materials list - show Engineer's Estimate of Quantities
- City Engineer's Approval/Signature Block
- Developer's name and address/Engineer's address and contact person
- Engineer's Statement:

These plans and specifications were prepared by me or under my supervision and to the best of my knowledge and belief comply with the City of Tehachapi ordinances and standards and include all improvement requirements of the advisory agency or other review boards.

Any errors, omissions, or deviations from these ordinances and standards encountered during construction shall be corrected and such corrections reflected on the Record drawings submitted to the City Engineer.

8.2.3.3 Plan and Profile Sheet(s)

- Horizontal and vertical scales on each sheet (1'" = 50' & 1" = 10' maximum)
- North arrow
- Sewer line location relative to centerline or property line
- Pipe size, length, and slope
- Relation to existing or proposed pipes, utilities, etc. - show by cross sections with verified depths
- Required sewer and water line separations, utility separations
- Lateral size - Show Depth of Cover (min. & max.) for each street
- Lateral location
- Lateral Stationing
- Finish Grade Profile with top of manhole elevations
- Stationing (centerline) - from south to north and west to east; coincident with street stationing; show 100 foot interval ticks on street centerline
- Manhole/Cleanout locations with top of cover and invert elevations in all directions.
- Conforms to master sewer plan (if applicable)
- Connection to existing sewer lines or structures
- Construction phasing limits shown

8.2.3.4 Details Required

Sewer plans shall contain all applicable sewer construction City of Tehachapi standard details and materials specifications as well as any other information that may not be included in these standards but is deemed necessary by the City Engineer.

8.2.4 Water Plans

8.2.4.1 General

Water construction plans shall contain all notes, details and specifications necessary to complete the proposed work. Maximum sheet size shall be 24" x 36". Project information shall include, but not be limited to the following checklist:

8.2.4.2 Cover Sheet

- Project Title
- Vicinity Map
- Key Map drawn to a scale of 1" = 200' (approx)
- Engineer's Certificate with seal and license expiration date
- General Notes
- Special Notes
- Legend
- Bench Mark
- Basis of Bearing
- Sheet Index
- Total number of sheets
- Materials list - show Engineer's Estimate of Quantities
- City Engineer's Approval/Signature Block
- Developer's name and address/Engineer's address and contact person
- Engineer's Statement:

These plans and specifications were prepared by me or under my supervision and to the best of my knowledge and belief comply with the City of Tehachapi ordinances and standards and include all improvement requirements of the advisory agency or other review boards.

Any errors, omissions, or deviations from these ordinances and standards encountered during construction shall be corrected and such corrections reflected on the Record drawings submitted to the City Engineer.

8.2.4.3 Plan Sheet(s)

- Horizontal on each sheet (1" = 50' max). Same scale to be used on all sheets.
- North arrow
- Water line location relative to centerline or property line
- Pipe size and length, fittings, valves, and services
- Relation to existing pipes, utilities, etc. - show by cross sections with verified depths
- Fire hydrant locations, existing and proposed
- Connection to existing water lines.
- Required sewer and water line separations, utility separations
- Stationing (centerline) - from south to north and west to east; coincident with street stationing; show 100 foot interval ticks on street centerline
- Construction phasing limits shown
- Easements - show dimensions and relations to property lines, street centerlines, and pipe. Show recordation data.

8.2.4.4 Details Required

Water plans shall contain all applicable Water construction City of Tehachapi standard details and material specifications that may not be included in these standards but are deemed necessary by the City Engineer.

8.2.5 Street Plans

8.2.5.1 General

Street construction plans shall contain all notes, details and specifications necessary to complete the proposed work. Maximum sheet size shall be 24" x 36". Project information shall include, but not be limited to the following checklist:

8.2.5.2 Cover Sheet

- Project Title
- Vicinity Map
- Key Map drawn to a scale of 1" = 200' (approx)
- Engineer's Certificate with seal and license expiration date
- General Notes
- Special Notes
- Legend
- Bench Mark
- Basis of Bearing
- Sheet Index
- Total number of sheets
- Materials list - show Engineer's Estimate of Quantities
- City Engineer's Approval/Signature Block
- Developer's name and address/Engineer's address and contact person
- Engineer's Statement:

These plans and specifications were prepared by me or under my supervision and to the best of my knowledge and belief comply with the City of Tehachapi ordinances and standards and include all improvement requirements of the advisory agency or other review boards.

Any errors, omissions, or deviations from these ordinances and standards encountered during construction shall be corrected and such corrections reflected on the Record drawings submitted to the City Engineer.

8.2.5.3 Plan and Profile Sheet(s)

- Horizontal and vertical scales on each sheet (1" = 50' and 1" = 10' maximums). Same scale to be used on all sheets.
- North arrow
- Plan and profile (show existing or proposed underground facilities which may conflict with construction in profile)
- Street pavement sections - Type and class, of AC and AB on each sheet
- Alley pavement sections (if applicable)
- Street dimensions, centerline to flowline, and flowline to property line

- D Curb and gutter, sidewalk - type and location on each sheet
- D Curb and gutter flowline slopes, curb return slopes
- D Curb and gutter curve data including radii, curve length, included angle, and tangent distance.
- D Cross gutter locations, widths, and slopes
- D Handicap ramps
- D Monuments
- D Street names
- D Street sign location
- D Street lights, type & location
- D Existing grades of adjacent areas at project perimeter
- D Stationing (centerline)- from south to north and west to east; show 100 foot interval ticks on street centerline
- D Right-of-Way lines
- D Walls / Fencing - as applicable
- D Show that opposite flowlines are within standard limits
- D Street centerline curve data including radii, curve length, included angle, and tangent distance.
- D Median island construction (if applicable)
- D Traffic striping for major streets (as directed by the City Engineer).
- D Ensure conformance to Master Drainage Plan or project grading plan.
- D Construction phasing lines shown

8.2.5.4 Details Required

Street plans shall contain all applicable Street construction City of Tehachapi standard details as well as any other details that may not be included in these standards but are deemed necessary by the City Engineer.

8.2.6 Landscaping/Wall Construction Plans

8.2.6.1 General

Landscaping / wall and irrigation construction plans shall contain all notes, details and specifications necessary to complete the proposed work. Maximum sheet size shall be 24" x 36". Project information shall include, but not be limited to the following checklist:

8.2.6.2 Cover Sheet

- D Project Title
- D Vicinity Map
- D Key Map drawn to a scale of 1" = 200' (approx)
- D Engineer's Certificate and Landscape Architect Certification (if required) with seal and license expiration date
- D General Notes
- D Special Notes
- D Legend
- D Bench Mark
- D Basis of Bearing
- D Sheet Index
- D Total number of sheets
- D Materials list - show Engineer's Estimate of Quantities
- D City Engineer's Approval/Signature Block

- Community Development Director's Approval/Signature Block
- Developer's name and address/Engineer's address and contact person
- Engineer's Statement / Landscape Architect Certificate:

These plans and specifications were prepared by me or under my supervision and to the best of my knowledge and belief comply with the City of Tehachapi ordinances and standards and include all improvement requirements of the advisory agency or other review boards.

Any errors, omissions, or deviations from these ordinances and standards encountered during construction shall be corrected and such corrections reflected on the record drawings submitted to the City Engineer.

8.2.6.3 Plan Sheet(s)

- Horizontal scales on each sheet (1" = 50' max). Same scale to be used on all plan sheets.
- North arrow
- "Line of Sight" easements as shown on the approved street plans.
- Water Line, with point of connection, for the project relative to street centerline or property line.
- Relation to existing pipes, utilities, etc.
- Stationing - from south to north and from west to east, and to be coincident with street stationing
- Material and plant legends
- Construction phasing limits (if applicable)

8.2.6.4 Details Required

Landscaping / walls and irrigation plans shall contain all applicable construction City of Tehachapi standard details as well as any other details that may not be included in these standards but are deemed necessary by the City Engineer.

8.3 UNIT PRICES

8.3.1 The following unit prices shall be used for the generation of a project cost estimate needed to determine bonding capacities.

8.3.2 Cost estimates shall be prepared by or under the supervision of a California registered engineer working on behalf of the Developer.

8.3.3 The following unit prices shall be increased by 3% per year each year following the most recent revision of the unit prices.

CITY OF TEHACHAPI
MUNICIPAL IMPROVEMENTS
ENGINEER'S ESTIMATE FORM

ITEM NO.	DESCRIPTION	UNIT	UNIT COST $	QUANTITY	TOTAL COST $
1	Earthwork volume (cut and fill)	CY	$2.75		$
2	Stock pile (total earth moved)	CY	$2.75		$
3	Perimeter walls (6 ft high)	LF	$30.00		$
4	Retaining walls (retaining portion only)	SF	$7.00		$
5	Structure Demolition	SF	$1.85		$
6	Clearing and grubbing	AC	$500.00		$
7			$		$
8			$		$
9			$		$
10			$		$
11			$		$

Subtotal Grading Costs **$**

CITY OF TEHACHAPI
MUNICIPAL IMPROVEMENTS
ENGINEER'S ESTIMATE FORM

ITEM NO.	DESCRIPTION	UNIT	UNIT COST $	QUANTITY	TOTAL COST $
1	12-inch RCP	LF	$66.00	_____	$ _____
2	18-inch RCP	LF	$70.00	_____	$ _____
3	21-inch RCP	LF	$73.00	_____	$ _____
4	24-inch RCP	LF	$75.00	_____	$ _____
5	27-inch RCP	LF	$78.00	_____	$ _____
6	30-inch RCP	LF	$82.00	_____	$ _____
7	36-inch RCP	LF	$88.00	_____	$ _____
8	42-inch RCP	LF	$92.00	_____	$ _____
9	48-inch RCP	LF	$113.00	_____	$ _____
10	54-inch RCP	LF	$144.00	_____	$ _____
11	60-inch RCP	LF	$157.00	_____	$ _____
12	72-inch RCP	LF	$190.00	_____	$ _____
13	Standard manholes	EA	$5,000.00	_____	$ _____
14	Junction boxes	EA	$5,000.00	_____	$ _____
15	Standard outlet structures	EA	$2,000.00	_____	$ _____
16	Standard Catch basins up to 5-ft in width	EA	$4,000.00	_____	$ _____
17	Other structures/headwalls, includes formwork and reinforcement	CY	$1,000.00	_____	$ _____
18	Rip rap	CY	$60.00	_____	$ _____
19	_____	_____	$ _____	_____	$ _____

CITY OF TEHACHAPI
MUNICIPAL IMPROVEMENTS
ENGINEER'S ESTIMATE FORM

ITEM NO.	DESCRIPTION	UNIT	UNIT COST $	QUANTITY	TOTAL COST $
20			$		$
21			$		$
22			$		$
23			$		$
				Subtotal Storm Drain Construction Costs	**$**

CITY OF TEHACHAPI
MUNICIPAL IMPROVEMENTS
ENGINEER'S ESTIMATE FORM

ITEM NO.	DESCRIPTION	UNIT	UNIT COST $	QUANTITY	TOTAL COST $
1	4-inch PVC sewer main	LF	$17.00	_____	$ _____
2	6-inch PVC sewer main	LF	$20.00	_____	$ _____
3	8-inch PVC sewer main	LF	$28.00	_____	$ _____
4	10-inch PVC sewer main	LF	$36.00	_____	$ _____
5	12-inch PVC sewer main	LF	$42.00	_____	$ _____
6	15-inch VCP sewer main	LF	$80.00	_____	$ _____
7	18-inch VCP sewer main	LF	$100.00	_____	$ _____
8	21-inch VCP sewer main	LF	$120.00	_____	$ _____
9	48-inch standard manhole	EA	$5,000.00	_____	$ _____
10	60-inch standard manhole	EA	$7,500.00	_____	$ _____
11	Sewer main cleanout	EA	$2,000.00	_____	$ _____
12	Sewer main tie-in	EA	$2,500.00	_____	$ _____
13	Cased road boring	LF	$ _____	_____	$ _____
14	_____	_____	$ _____	_____	$ _____
15	_____	_____	$ _____	_____	$ _____
16	_____	_____	$ _____	_____	$ _____
17	_____	_____	$ _____	_____	$ _____
18	_____	_____	$ _____	_____	$ _____

Subtotal Sewer Construction Costs **$** _____

CITY OF TEHACHAPI
MUNICIPAL IMPROVEMENTS
ENGINEER'S ESTIMATE FORM

ITEM NO.	DESCRIPTION	UNIT	UNIT COST $	QUANTITY	TOTAL COST $
1	4-inch PVC water main	LF	$18.00	_____	$ _____
2	6-inch PVC water main	LF	$24.00	_____	$ _____
3	8-inch PVC water main	LF	$32.00	_____	$ _____
4	10-inch PVC water main	LF	$40.00	_____	$ _____
5	12-inch PVC water main	LF	$50.00	_____	$ _____
6	14-inch PVC water main	LF	$60.00	_____	$ _____
7	16-inch PVC water main	LF	$70.00	_____	$ _____
8	4-inch DIP water main	LF	$30.00	_____	$ _____
9	6-inch DIP water main	LF	$35.00	_____	$ _____
10	8-inch DIP water main	LF	$40.00	_____	$ _____
11	10-inch DIP water main	LF	$45.00	_____	$ _____
12	12-inch DIP water main	LF	$55.00	_____	$ _____
13	14-inch DIP water main	LF	$65.00	_____	$ _____
14	16-inch DIP water main	LF	$75.00	_____	$ _____
15	4-inch gate valve	EA	$500.00	_____	$ _____
16	6-inch gate valve	EA	$600.00	_____	$ _____
17	8-inch gate valve	EA	$800.00	_____	$ _____
18	10-inch gate valve	EA	$1,000.00	_____	$ _____
18	12-inch gate valve	EA	$1,300.00	_____	$ _____
19	14-inch butterfly valve	EA	$2,200.00	_____	$ _____

CITY OF TEHACHAPI
MUNICIPAL IMPROVEMENTS
ENGINEER'S ESTIMATE FORM

ITEM NO.	DESCRIPTION	UNIT	UNIT COST $	QUANTITY	TOTAL COST $
20	16-inch butterfly valve	EA	$3,000.00	_____	$ _____
21	Fire hydrant assemblies	EA	$4,350.00	_____	$ _____
22	Blow off assemblies	EA	$2,200.00	_____	$ _____
23	Waterline tie-ins	EA	$2,500.00	_____	$ _____
24	Air-release valves	EA	$1,650.00	_____	$ _____
25	Residential water services	EA	$1,100.00	_____	$ _____
26	Commercial Water Services	EA	$3,500.00	_____	$ _____
27	Cased road boring	LF	$ _____	_____	$ _____
28	_____	_____	$ _____	_____	$ _____
29	_____	_____	$ _____	_____	$ _____
30	_____	_____	$ _____	_____	$ _____
31	_____	_____	$ _____	_____	$ _____
32	_____	_____	$ _____	_____	$ _____

Subtotal Water Construction Costs **$** _____

CITY OF TEHACHAPI
MUNICIPAL IMPROVEMENTS
ENGINEER'S ESTIMATE FORM

ITEM NO.	DESCRIPTION	UNIT	UNIT COST $	QUANTITY	TOTAL COST $
1	A.C. (3")	SF	$0.90	_____	$ _____
2	A.C. (3.5")	SF	$1.00	_____	$ _____
3	A.C. (4")	SF	$1.10	_____	$ _____
4	A.C. (5")	SF	$1.40	_____	$ _____
5	Crushed aggregate base	CY	$50.00	_____	$ _____
6	Pavement removal	CY	$30.00	_____	$ _____
7	PCC curb and gutter	LF	$13.00	_____	$ _____
8	PCC cross gutter	SF	$6.00	_____	$ _____
9	PCC sidewalk (4")	SF	$6.00	_____	$ _____
10	PCC driveway (4")- residential	SF	$6.00	_____	$ _____
11	PCC driveway (6")- C=commercial	SF	$6.00	_____	$ _____
12	PCC curb ramp	EA	$1,800.00	_____	$ _____
13	Guard rail/barricade	LF	$41.50	_____	$ _____
14	Guide markers	EA	$13.00	_____	$ _____
15	Tree removal (avg. 12" dia.)	EA	$500.00	_____	$ _____
16	Adjust utility covers. to grade	EA	$750.00	_____	$ _____
17	Remove temporary turnaround	EA	$650.00	_____	$ _____
18	Construct temporary turnaround	EA	$1,300.00	_____	$ _____
19	Saw Cut	LF	$1.10	_____	$ _____
20	Signing and Stripping	LS	$ _____	_____	$ _____

CITY OF TEHACHAPI
MUNICIPAL IMPROVEMENTS
ENGINEER'S ESTIMATE FORM

ITEM NO.	DESCRIPTION	UNIT	UNIT COST $	QUANTITY	TOTAL COST $
21			$		$
22			$		$
23			$		$
24			$		$
25			$		$

Subtotal Street Construction Costs **$**

CITY OF TEHACHAPI
MUNICIPAL IMPROVEMENTS
ENGINEER'S ESTIMATE FORM

ITEM NO.	DESCRIPTION	UNIT	UNIT COST $	QUANTITY	TOTAL COST $
1	Traffic control, mobilization, and cleanup	LS	$		$
2	Chain link fence 6-ft high	LF	$27.00		$
3	Survey monument encasements	Ea	$750.00		$
4	Street signs	Ea	$225.00		$
5	Street lights	Ea	$2,400.00		$
6	Utility relocation	LS	$		$
7	Landscaping system costs	LS	$		$
8			$		$
9			$		$
10			$		$
11			$		$
12			$		$

Subtotal Misc. Construction Costs	**$**
PROJECT SUBTOTAL	$
20% Construction Contingency	$
3% inflation rate for every year after January 2006	$
PROJECT TOTAL ESTIMATED COST	$

DIVISION NINE
STANDARDS FOR PARKS DEVELOPMENT

9.1 INTRODUCTION

9.1.1 Purpose and Scope

9.1.1.1 The City defines a park as a parcel or contiguous parcels of land which is owned, operated, and maintained by a public agency or private association and which provides recreational land and facilities for the benefit and enjoyment of the residents and visitors of the City. The City designates parks into classifications as defined in these standards.

9.1.1.2 These park design development standards are developed to consolidate policies, procedures, guidelines, and standards for public parks. The intent of this division is to provide guidance to all parties involved with park dedication and design.

9.1.2 Enforcement

Provisions of these standards for park development shall be enforced by the City Engineer, the City Community Development Director, and their duly authorized representatives.

9.1.3 Waiver of Review Process

9.1.3.1 There are no provisions for the waiver of the review process for park development design plans.

9.1.3.2 The design standards in this division are to be deemed to be minimal. Alternate designs may be permissible, as determined by the City for designs of equal or higher quality. The City may allow such exceptions as it may find to be reasonably required by the circumstances of the case, to be in the public interest and in conformity with the general objectives of these standards.

9.1.3.3 The provisions of these standards are not intended to prevent the use of any material or method of construction not specifically prescribed by this manual if such alternate has been submitted to and has been approved by the City Engineer.

9.1.3.4 The City may approve alternate designs, if such alternate is found to be for the purpose intended and at least the equivalent of that prescribed in this manual in quality, strength, capacity, durability, safety, and effectiveness.

9.2 LAND DEDICATION / DEVELOPMENT FEES

9.2.1 Park Land Dedication

Land proposed to be dedicated for park purposes shall be shown on the preliminary plat map. Land that shall be conveyed to the City shall be free and clear of all encumbrances, except those which will not interfere with the use of the land for its intended purposes as directed by the City and which the City agrees to accept. It is preferred that dedications occur on the final tract or parcel map.

9.2.2 Park Dedication Requirements or Development Fees in Lieu of Dedication

9.2.2.1 Dedication of land for park and recreation facilities or the payment of development fees in lieu of the land dedication shall be in accordance with Article 17.41 and 17.42 of the City's Municipal Code.

9.2.2.2 If the gross acreage for a development is smaller than 20 acres, the in-:lieu fee shall be paid per Paragraph 9.2.2.1.

9.2.2.3 If the gross acreage for a development is 20 acres or larger and smaller than 50 acres, either parkland shall be dedicated or fee in-lieu of shall be paid based on the City's sole discretion.

9.2.2.4 If the gross acreage is greater than 50 acres than park land shall be dedicated.

9.3 PARK DEVELOPMENT DEFINITIONS AND DESIGN POLICIES

9.3.1 Public Park

9.3.1.1 Definition

Parks are to be a minimum of one half acres in size, excluding encumbrances that limit design opportunities such as stormwater facilities, easements, and school grounds. Typical facilities include active and passive open space, playground equipment, sports fields and picnic areas. Public parks are owned and maintained by the City. No public park shall be located within a residential gated community. Public park sites shall be accessible by an existing or proposed public street(s) and visible to the general public. Whenever possible, park facilities should be located adjacent to other existing or proposed public facilities such as schools, libraries, stormwater facilities, open spaces, etc. These public parks and their design policies are as outlined in the proceeding sections.

9.3.2 Pocket Park

9.3.2.1 Definition

Pocket parks are small, urban parks that function primarily as neighborhood social areas. Pocket parks are primarily passive places with a limited number of small scale areas for active use such as playgrounds.

9.3.2.2 Design Policies

a. The service area of Pocket Parks shall be of a one quarter of a mile radius and shall range between 1/2 of an acre and 1 acre in size.

b. Pocket Parks shall emphasize pedestrian movement to and within the pocket park.

c. Pocket Parks shall create spaces that are integrated into the fabric of the neighborhood.

d. Pocket Parks shall provide a good opportunity for themed or specialized spaces.

e. Accessibility shall be provided by way of neighborhood paths or sidewalks along residential streets. The site should be central to the area it serves and be relatively level. Walking distance should not exceed one-quarter mile and not require crossing of busy streets.

f. On site parking and restroom facilities are not required at Pocket Parks.

g. Site lighting shall be provided for security and safety.

h. The park shall be visually accessible from a public street. The landscape design shall not create places of concealment.

i. A Pocket Park shall contain at minimum the following facilities;

1) Sufficient lighting fixtures to illuminate park walkways and open spaces intended for informal play areas.

2) Landscaping which emphasizes shading along park boundaries and walkways and provides for open play areas for sports activities.

3) Parking shall be provided via adjacent public streets.

4) Regulatory and non regulatory signs such as the park entrance sign with the park's name and ADA accessible path of travel and facilities signs.

5) Park seating benches shall be provided at park assembly areas such as the kids play area and at strategic locations adjacent to walkways.

6) One family picnic area which should include one barbecue pit and four picnic tables under a picnic shelter. The picnic area shall have access to a secured quick coupler and a weather protected electrical receptacle outlet.

7) Bicycle racks located at strategic assembly locations such as the park entrances, kid's play area, and next to open space areas intended for sports activities.

8) One kid's play area to include standard play equipment such as slides, swings, monkey bars, climbing walls, etc.

9) Trash receptacles shall be provided at strategic assembly areas such as the kid's play area, the picnic area, and next to park seating benches.

10) Provide a minimum of one drinking fountain facility located a minimum of 50 feet from the kids play area.

9.3.3 Neighborhood Park

9.3.3.1 Definition

Neighborhood parks are smaller than 3 acres. These parks are close to residents, within walking or biking distance, and fulfill active recreation needs for playgrounds, informal play fields, multipurpose courts and passive open space. The green, open space is important to the vitality and character of neighborhoods. These parks can be a focus of neighborhood recreational and social activity. Neighborhood parks are particularly important because they provide easy access being close to users' homes, and provide recreation for children, the elderly, and other less mobile populations.

9.3.3.2 Design Policies

a. The service area of Neighborhood Parks shall be of a one half of a mile radius and shall range between 1 and 3 acres in size.

b. Neighborhood Parks shall emphasize pedestrian movement to and within the park.

c. Neighborhood Parks shall create spaces that are integrated into the fabric of the neighborhood.

d. Neighborhood Parks shall provide a good opportunity for themed or specialized spaces.

e. Development of Neighborhood Parks should be aimed to achieve a balance between active and passive park uses. For this reason, Neighborhood Parks should be located on a site that has some natural aesthetic appeal and is predominately flat.

f. Active recreational facilities in Neighborhood Parks are intended to be used in an informal and unstructured manner. Appropriate facilities include: multi-use open fields for soccer, football, and baseball, as well as opportunities for non-supervised, non-organized recreation activities such as basketball, volleyball, and tennis, facilities for picnicking, and children's play areas.

g. Ease of access and walking distance are critical factors in locating a Neighborhood Park. Accessibility shall be designed by way of sidewalks along residential streets or neighborhood trails. The park design should encourage pedestrian access and or bicycle access.

h. Site lighting shall be provided for security and safety.

i. The park shall be visually accessible from a public street. The landscape design shall not create places of concealment.

j. A Neighborhood Park shall contain at minimum the following facilities;

1) Sufficient lighting fixtures to illuminate park walkways and open spaces intended for active sports areas and kids play areas.

2) Landscaping which emphasizes shading along park boundaries and walkways and provides for open play areas for sports activities.

3) If less than 300 lineal feet of street frontage exists, a minimum of 3 spaces per acre of usable active park areas should be provided with a proportionate number of ADA van accessible parking stall(s).

4) Regulatory and non regulatory signs such as the park entrance sign with the park's name and ADA accessible path of travel and facilities signs.

5) Park seating benches shall be provided at park assembly areas such as the kids play area and at strategic locations adjacent to walkways.

6) Two family picnic areas which should include one barbecue pit and four picnic tables under a picnic shelter. The picnic area shall have access to a secured quick coupler and a weather protected electrical receptacle outlet.

7) Bicycle racks located at strategic assembly locations such as the park entrances, kid's play area, and next to open space areas intended for sports activities.

8) One kid's play area to include standard play equipment such as slides, swings, monkey bars, climbing walls, etc.

9) Trash receptacles shall be provided at strategic assembly areas such as the kid's play area, the picnic area, adjacent to the restroom facilities, and next to park seating benches.

10) Provide a minimum of three drinking fountain facilities located at strategic assembly locations such as a minimum of 50 feet from the kids play area, and adjacent to walkways along open spaces intended for sports activities.

9.3.4 Community Park

9.3.4.1 Definition

Community parks are places accessible to two or more adjacent neighborhoods. Community parks range in size from 3 to 10 acres and generally provide a larger park with off-street parking, flexible open space for picnicking and passive use, and athletic facilities for organized sports. They often have special features including flower beds or viewpoints, which draw residents from surrounding neighborhoods.

9.3.4.2 Design Policies

a. The service area of Community Parks shall be of a 2 to 3 mile radius and shall range between 3 and 10 acres in size.

b. Create spaces that enrich the park character while meeting both the passive and active recreation needs of the community.

c. Community Parks shall emphasize pedestrian and bicyclist movement to and within the park.

d. Community Parks shall create spaces that are integrated into the fabric of the neighborhoods surrounding the park.

e. Development of Community Parks should be aimed to achieve a balance between active and passive park uses. For this reason, Community Parks should be located on a site that has some natural aesthetic appeal and is predominately flat. At least two thirds of the park shall be used for active recreational facilities.

f. Active recreational facilities in Community Parks are intended to be used in a formal and structured manner. Appropriate facilities include: multi-use open fields for soccer, football, and baseball fields, as well as opportunities for recreation activities such as basketball, volleyball, and tennis, facilities for picnicking, outdoor staging, and children's play areas.

g. Accessibility shall be designed by way of sidewalks and bikeways along residential streets or neighborhood trails. The park design should encourage access by foot, car, or bicycle.

h. Community parks shall incorporate onsite parking and restroom facilities as noted in section 9.3.4.2.K.

i. Site lighting shall be provided for security, safety and as required for specific formal sports field/courts.

j. The park shall be visually accessible from a public street. The landscape design shall not create places of concealment.

k. A Community Park shall contain at minimum the following facilities;

1) Sufficient lighting fixtures to illuminate park walkways and open spaces intended for active sports areas and kids play areas.

2) Landscaping which emphasizes shading along park boundaries and walkways and provides for open play areas for sports activities. Landscaping system shall also provide for flower beds, and viewpoints. Park designer shall select appropriate turf materials for formal sports fields.

3) Parking requirements depend upon facilities provided. Generally provide 5 spaces per acre of active use area plus a proportionate number of ADA van accessible spaces.

4) Provide for separate female and male restrooms facilities.

5) Regulatory and non regulatory signs such as the park entrance sign with the park's name and ADA accessible path of travel and facilities signs.

6) Park seating benches shall be provided at park assembly areas such as the kids play area and at strategic locations adjacent to walkways.

7) Three family picnic areas which should include one barbecue pit and four picnic tables under a picnic shelter. The picnic area shall have access to a secured quick coupler and a weather protected electrical receptacle outlet.

8) Bicycle racks located at strategic assembly locations such as the park entrances, kid's play area, and next to open space areas intended for sports activities.

9) One kid's play area to include standard play equipment such as slides, swings, monkey bars, climbing walls, etc.

10) Trash receptacles shall be provided at strategic assembly areas such as the kid's play area, the picnic area, and next to park seating benches.

11) Provide a minimum of six drinking fountain facilities located at strategic assembly locations such as a minimum of 50 feet from the kids play area, adjacent to the restroom facilities, adjacent to picnic areas, and adjacent to walkways along open spaces intended for sports activities.

9.3.5 Regional Park

9.3.5.1 Definition

Regional parks serve the entire community. These parks are all greater than 10 acres and have a major impact on the image of the city. They break the grid system pattern, enhance the environment with visual and physical relief, and reduce noise and pollution. These parks make green, open landscapes accessible to residents. Regional parks provide larger areas for complexes or facilities, large amounts of flexible passive open space, picnic facilities, playgrounds, athletic fields, and outdoor stages.

9.3.5.2 Design Policies

a. The service area of Regional Parks shall cover the entire City limits and shall be larger than 10 acres in size.

b. Emphasize pedestrian and bicyclist movement to and within the park.

c. A parking study shall be performed to evaluate the required parking quantity for all Regional Parks.

d. Typical development shall include large play area, sports complexes, basketball courts, trails, picnic areas, tennis courts, and necessary restroom facilities.

e. Regional parks should be located near major circulation routes including access to public transportation.

f. Create spaces that enrich the park character while meeting both the passive and active recreation needs of the City.

g. Community Parks shall emphasize pedestrian and bicyclist movement to and within the park as well as interior vehicle access for maintenance and equipment delivery traffic to and from assembly areas such as outdoor stages and sports fields.

h. Site lighting shall be provided for security, safety and as required for specific formal sports field/courts and other assembly areas.

i. Regional parks shall contain recreational pool facilities. Size and design of the pool facilities shall be determined by the City's Community Development Department at time of request for development.

j. At minimum Regional Parks shall include those facilities listed for Community Parks. If a private developer is required to develop a Regional park, the park design and development shall be closely coordinated with the City's Community Development Department. Thus, facilities required for regional parks shall be as required by the City Community Development Department. A Special Study may be required to determine the facilities required. Costs for such study shall be at the expense of developers or by way of a Park Development Fee.

9.4 PARK DESIGN AND DEVELOPMENT

9.4.1 Grading and Drainage

The provisions of Division Two of these standards shall also apply to park development.

9.4.2 Infrastructure

All public parks shall be constructed with the "required" water, sewer, storm drain, and electrical infrastructure necessary for the park facilities being provided. Any infrastructure improvements dedicated to the City shall conform to the provisions of these standards.

9.4.3 Park Walkways

9.4.3.1 The purpose of walkways is to highlight pedestrian circulation routes through a park and provide a durable surface on which to walk these routes. Pedestrian circulation should connect people to program elements, special features, and parking; however, some walkways just provide a place for recreational walking. Looped walkway systems, as well as perimeter walks within the ROW, are preferred. Entrances to parks are emphasized by walkways and these should be located in a logical, convenient and aesthetic manner. Coordinate with Public Works to ensure connectivity within the ROW and through adjacent neighborhoods.

9.4.3.2 Primary walkways

a. The purpose of primary walkways is to formalize the primary pedestrian circulation route, provide accessibility to all users and allow emergency and maintenance vehicle access. Primary walkways should include security lighting and be composed of concrete. Provide a minimum 20' radius at intersections. Primary walkways shall be a minimum of 10 feet wide with the exception of walkways along public right of way which shall be 5 feet wide.

9.4.3.3 Secondary walkways

a. Secondary walkways support circulation patterns and serve aesthetic aspects such as dividing landscape types or program elements. These walkways can be composed of concrete, crusher fines, asphalt, pavers, etc., but must be an ADA accessible surface. Security lighting on secondary walkways should be determined on a case by case basis. Secondary walkways shall be a minimum 6 feet wide.

9.4.4 Stairs and Ramps

9.4.4.1 Stairs and ramps shall comply with ADA guidelines. Open risers are not permitted under ADA. Specifics on treads and risers, handrails and detectable warnings are given in the ADA guidelines. Additionally, the maximum height between landings, on stairs, should be five feet. To prevent potential tripping hazards, single steps should be avoided. For ramps, specifics on width, slope, landings, handrails, edge protection and outdoor conditions are given in the ADA guidelines.

9.4.5 Plazas

9.4.5.1 Plazas shall comply with ADA standards, provide the ability to accommodate a wide variety of functions/events in the space, and should have positive drainage away from buildings. Expansion and control joints should be provided to functionally manage cracking and to aesthetically add to the plaza design. Provide for lighting, electric power and a water source.

9.4.6 Vehicle Parking

9.4.6.1 Parking standards for Regional parks shall be determined based on a parking study. For Neighborhood and Community Parks the following table is offered as a guide. In either situation the most conservative parking shall be provided as determined by the design guidelines or this table. Parking numbers may be achieved through the use of both on-street parking and off-street parking, in the park and adjacent to the park. Parking areas should provide preferred parking for carpools and vanpools in addition to required accessible spaces. Meet accessibility guidelines for both on-street and off-street parking. Provide drop off areas within the park, where appropriate. Parking should be located, if possible, near the activity it is intended to serve. A desirable distance is within 250 to 300-feet, and no more than 400-feet from the activity.

Primary Use	Minimum Parking Ratio (Informal Complexes)	Minimum Parking Ratio (Formal Complexes)
Multi Purpose Fields	15 / field	30 / field
Tennis Courts	2 / court	4 /court
Basketball Courts	5 / court	10 / court
Baseball / Softball Fields	20 / field	40 / field
Playgrounds	1 / 600 square feet	
Picnic Areas	1 / 100 square feet	
Outdoor Event Facilities (Outdoor Stages)	1 / 4 seats or 1 / 50 square feet of gross floor area	

9.4.7 Bicycle Parking

Bicycle parking at park buildings should provide for 15% or more of building occupants. Bicycle parking for program elements should be 10% of vehicular spaces.

9.4.8 Landscaping and Irrigation

9.4.8.1 In addition to the following guidelines, landscaping and irrigation shall conform to Division Six of these Standards and the City's Community Development Guidelines for Landscaping.

9.4.8.2 Landscape should aesthetically complement and enhance the overall design of a park. However, landscape within a park should also serve a functional purpose. Turf should be located in general use and programmed use areas and in tree lawns. Low-water turf should be used in other nonprogrammed areas as an alternative to water-intensive turf. The aesthetics of planting beds should be weighed against maintenance considerations. Planting beds should be used in: highly visible areas to enhance entry, transition areas to separate uses, steeply sloped areas to prevent erosion, and specialty gardens as a program element. Trees are an important part of any park and should: provide shade and seasonal interest, screen views, enhance the uniqueness of a site and highlight axes and formal designs.

9.4.8.3 Plants should be grouped by water requirements in order to minimize water usage. Plant locations and spacing shall permit normal plant development without undue crowding or trimming. Shrubs, groundcover and vines should be spaced at a minimum of one-half of their mature diameter from all walkways to prevent overcrowding and impeding on walkways. Where possible, provide walkways to separate lawn areas from shrub and groundcover areas to reduce edging costs. No metal edging is allowed in parks for safety reasons. Mulch should be applied to all planting beds and underneath trees; Consult the City's Community Development Department for a list of approved plantings.

9.4.8.4 Planting beds and vegetation heights shall not impede on line of sight requirements at intersections or signage. Planting beds should achieve year-round visual interest through plant selection (i.e., deciduous and evergreen materials, ornamental grasses, varied blooming schedules). Plant shrubs and perennials in groupings in order to achieve a proper massing of vegetation. Small planting areas are discouraged.

9.4.8.5 No more than ten percent of the total number of trees in a plan should be of the same species. Trees should provide shade and seasonal interest, screen views, enhance the uniqueness of a site and highlight axes and formal designs.

9.4.8.6 Trees planted in turf areas shall be spaced to permit the most effective use of mechanized maintenance equipment and operation of irrigation system. There should be 15 feet between trees and other vertical objects in the park. For all trees installed in turf areas, provide the specified bark mulch 4-inches deep in a minimum 48-inch diameter around the tree. Trees shall be staked according to specifications and details. Groves of trees are encouraged, where appropriate.

9.4.8.7 The design of an irrigation system shall be based on hydrozones and shall be designed to efficiently apply uniform water throughout each zone. Irrigation systems shall be designed for head to head coverage. Verification of pressure shall be provided to the City. The irrigation design must also have sufficient residual pressure and flow to accommodate site conditions, field changes and unforeseen future demands as well as anticipated future demands, if it is a phased project. Water conservation equipment, such as rain/wind sensors and weather stations, should be used when appropriate.

9.4.9 Picnic Shelters

9.4.9.1 Picnic shelters shall be of wood or steel frame construction supported on reinforced concrete footings and integral concrete slabs. These structures shall be subject to the approval of the City's Building Official and shall meet all architectural standards adopted by the city's Community Development Department. Picnic shelter shall be of sufficient size to enclose the required amenities as outlined in Section 9.3.

9.4.9.2 Shelters should be located near parking, restrooms, and play areas and shall be ADA accessible. Reasonable access to parking for delivery of food, tents, etc., shall be made

9.4.10 Restroom Facilities

9.4.10.1 The minimum restroom size shall be two toilets and one lavatory in a women's room and one toilet, one urinal and one lavatory in a men's room. However in cases of very intense use, such as formal ball fields / courts, it will be necessary to add fixtures. When the number of people gathered at a particular site reaches 225, add one toilet in the women's and one urinal in the men's restroom. When the number grows to 300 add one more toilet in the women's and men's restrooms. Design restrooms to provide a service life of a minimum of 50 years when properly maintained. At a minimum, provide ADA compliant dimensions. Incorporate vandal and graffiti resistant design features.

9.4.10.2 Use best practice site analysis/design and integrate the restroom facility into the park. Locate the restroom in obvious areas of the park so that restroom can be easily found by park users and near roads for reasonable access by maintenance staff. Locate within sight and reasonable walking distance of the most intensely used areas; however, restroom facilities should be at least 50 feet away from playgrounds because children may put sand in the drinking fountains when playing. The restrooms should be visible from the areas of intense activity within the park, and where possible, visible from park entrances and the street for safety reasons.

9.4.10.3 Restroom facilities shall be constructed of reinforced masonry or concrete and shall be subject to the approval of the City's Building Official and the architectural standards of the City's Community Development Department.

9.4.10.4 Restroom facilities should provide an additional separate space of sufficient size to accommodate storage for Maintenance and misc. equipment. Provide a minimum paved 8'-0" wide service road with a turnaround for ¾-ton maintenance vehicles.

9.4.10.5 Lighting in restroom and storage facilities shall be controlled by occupant sensors, time clock, or a photo cell.

9.4.11 Playgrounds

9.4.11.1 Playgrounds shall be designed to offer the greatest play potential possible within the budgetary constraints and physical restrictions of the site. The play experience should challenge the users by addressing their physical, social and mental development while providing entertainment. The play environment shall be safe, durable, vandal resistant and require minimal maintenance. Playgrounds and equipment shall meet the current requirements of:

a. Americans with Disabilities Act (ADA);

b. Consumer Product Safety Commission's (CPSC) Handbook for Public Playground Safety;

c. American Society for Testing and Materials' (ASTM)(F-1487) Standard Consumer Safety Performance Specification for Playground Equipment for Public Use (F-1292), Standard Specification for 15 Impact Attenuation of Surface Systems Under and Around Playground Equipment and Standard Specification for Determination of Accessibility of Surface Systems Under and Around Playground Equipment (F-1951);

d. International Play Equipment Manufacturers Association (IPEMA).

9.4.11.2 Playgrounds shall be located within close proximity to picnic and turf play areas and should be designed with good sightlines in mind. Playgrounds should be located off secondary or tertiary walkways to prevent playground surfacing material transfer onto primary walkways and separate play areas from vehicular circulation. Play areas for preschool children (ages 2-5 years) shall be separated from play areas for school-age children (ages 5-12 years), if possible. Barbecues and plant materials with thorns or stickers, or that attract bees, or other potential hazards shall not be located adjacent to play areas. Provide seating close enough to play areas for adults to supervise children. Incorporate shade into the playground and seating where possible. Playgrounds shall be contained by curbs or adjacent walks. Due to fluctuations in surfacing materials (eg.. Engineered wood fiber), a ramp conforming to ADA standards for disabled access shall be provided to play pits and should be designed to not impede on safety zones. Colors of proposed equipment and surfacing materials shall be reviewed by the City for heat absorption qualities. Avoid colors where surfaces get too hot to use in the summer.

9.4.11.3 The play area subgrade shall have positive drainage for all play area surfaces. Concrete sub-base for poured-in-place rubber surfacing shall slope at 1% minimum towards drain inlet or sump. Provide subsurface drainage where necessary. Leach lines or sumps may be considered if a storm drain is not available and is approved by the City. If sumps are needed, design them outside of the play area, if possible, to minimize the amount of drainage rock that infiltrates the play area in the event children dig down and pull up the filter fabric, or repairs to the play equipment require digging.

9.4.11.4 Acceptable surfacing material includes engineered wood fiber or rubberized paving. Sand play areas should be used only as play features. Sand should not be used as the predominant playground surfacing. If both sand and engineered wood products are used in the same play area, then they shall be separated from each other by a minimum of 5' of paving or rubberized surfacing.

a. Sand shall be 4"-6" below the adjacent paving.

b. Engineered wood fiber may be flush, or up to 4" below adjacent paving, after settlement. EWF shall be an energy absorbing protective surfacing manufactured for playground installations. It shall be nontoxic, free of bark and organic materials, independently tested by ASTM Standard F1292, with sufficient fines to comply with ADA requirements, while maintaining Head Impact Criteria (HIC). Depth of playpit, shall be 12" plus 2"-4" of freeboard. EWF shall be 12" minimum compacted, and shall be of a thickness sufficient to attenuate falls per ASTM F1292.

c. Rubber pavers shall meet the requirements of CPSC and ASTM for play areas. Only pavers which have joints that will not trap sand or dirt in the process of expansion and contraction are allowed. Pavers may be placed on a concrete sub-base, and shall be of a thickness sufficient to attenuate falls per ASTM F1292.

d. Rubberized paving shall meet the requirements of CPSC and ASTM for play areas. All rubberized paving shall be installed on a concrete sub-base. Refer to manufacturer's specification and installation procedures. Provide a 30-45 degree cant into adjacent sand play area which shall be keyed into concrete sub-base.

9.4.11.5 All play equipment shall be installed in accordance with the manufacturer's specifications. All playground equipment, whether premanufactured or custom play elements, shall conform to the aforementioned playground standards. Follow the most current CPSC and ASTM guidelines for all safety zones.

9.4.12 Park Furnishings

9.4.12.1 Site furniture in lawn areas shall be spaced a minimum of 15' from other site furniture, fencing/walls, and trees/shrubs to accommodate City lawn mowers. Site furniture shall be located to avoid conflicts with irrigation systems, other park improvements, and will be located in areas that will be the least damaging to native plant communities.

9.4.12.2 Picnic Tables

a. Provide a minimum of four tables per picnic areas. All tables and seats shall be 8 feet long.

b. Each table shall be placed on a reinforced concrete pad, 12 feet long, 9 feet wide and 4 inches thick, with the length of the table parallel to the length of the pad.

c. All frames shall be 2 3/8-inch OD galvanized metal. Positioning of frame to top and seats shall be per manufacturer's specifications.

d. All tables and seats shall be surface mounted, using stainless steel anchor bolts.

e. Coated Expanded Metal: Top and slats shall be fabricated from 11 gauge punched flat steel sheet with 11 gauge steel bracing welded to the underside for extra rigidity. Top and seat shall be coated with a 1/8-inch oven-cured poly-vinyl chloride, dark green in color.

f. At least 50 percent of all picnic tables shall be handicap accessible.

9.4.12.3 Park Benches

a. All benches must have backs and shall be 6 feet long

b. All park benches shall be placed on a reinforced concrete pad. Benches shall be centered on the pad. If there is a non-flush obstruction at the front of the bench, the bench shall either be placed flush to that obstruction or shall over-hang it, so as not to present a safety hazard.

c. All frames shall be 2 3/8 inches OD-galvanized surface mounted type.

d. Seats shall be surface mounted, using stainless steel anchor bolts.

e. Coated Expanded Metal: Seats and backs shall be poly-vinyl coated expanded metal. Finished. poly-vinyl coating shall be approximately 0.08 inches thick with 85 durometer hardness and a matte finish. Color shall be dark green.

f. At least 50 percent of all park benches should be handicapped accessible with companion seating space next to the bench, outside of the path of travel.

g. All fasteners shall be stainless steel.

9.4.12.4 Drinking Fountains

a. All fountains shall be vandal resistant, frost proof, dual purpose and handicap accessible.

b. Each fountain shall be set on a 2½ feet long, 2 feet wide, 4 inches thick concrete slab and positioned in accordance with manufacturer's specifications.

c. All anchors and anchoring material (bolts, nuts, washers, etc.) shall be of stainless steel.

d. All fountains shall be connected to sewer lines in accordance with City Standards.

e. The incoming water lines shall have ball type shut-off valve located off the slab in an approved valve box. The valve body shall be of bronze or stainless steel. The interior parts shall be same type as the body.

f. The outgoing waste line shall have a minimum 2-inch "Y" type strainer installed and placed in an approved valve box off the slab. Strainer will be positioned to allow easy access to strainer opening.

g. Portable lines shall have a reduced pressure principal device (RPPD). Backflow prevention device shall be installed and secured down-station of the meter. Installation will conform to City Standards.

9.4.12.5 Barbecue Pits

a. Barbecue pits shall be constructed of either metal or masonry and shall be located outside the circulation routes. If located in lawn areas, provide a concrete pad as a mow strip. There shall be no barbecues in Natural Areas due to potential fires, but barbecues are allowed in managed parks/areas adjacent to Natural Areas.

9.4.12.6 Bicycle Racks

a. All bicycle racks shall be 2 3/8-inch tubular powder coated steel; Surface mounted with stainless steel anchor bolts.

9.4.12.7 Trash Receptacles

a. Trash Receptacles shall be secured in place by an approved method accepted by the City.

9.4.12.8 Fencing

a. Fencing along park perimeters adjacent to residential or commercial developments shall be constructed of reinforced masonry in accordance with City Standards.

9.4.12.9 Spectator Seating

a. All fields and courts that do not have spectator seating shall have an accessible area on each side of the field that is suitable for viewing the game, without being a safety hazard.

b. All constructed spectator viewing areas such as bleachers, shall have integrated accessible seating with companion seating.

c. A companion seat shall be provided adjacent to each required handicapped wheelchair seating pad. The space shall be marked with a reduced size blue universal sign painted or stenciled on the concrete pad. Recreation Space Plans shall show the 4 foot by 5 foot area and the blue universal sign painted on the concrete pad.

d. All wheelchair seating must provide a comparable line of sight to other spectator seating. When wheelchair seating is located behind other spectator seating and the spectators are expected to stand during the activity, the wheelchair seating must provide a comparable line of sight over standing spectators. A comparable line of sight allows a person using a wheelchair to see the playing surface between the heads and over the shoulders of the persons standing in the row immediately in front and over the heads of the persons standing in front.

9.4.13 Baseball and Softball Fields

9.4.13.1 All fields, dugouts and spectator areas shall provide access for disabled individuals by way of walkways, ramps, or other acceptable means.

9.4.13.2 Backstop shall be surrounded by a 6 inch high concrete curb or block wall on the outside of the backstop to keep water from draining onto the field. All concrete surrounding the backstop shall slope 1 percent away from the field.

9.4.13.3 Batting cages are required when more than two lighted ballfields are located on one site. Each batting cage shall have a minimum inside dimension of 70 feet by 15 feet (for Regulation and Pony Baseball Use) or 60 feet by 15 feet (for youth baseball or softball use). The floor shall be a 4-inch thick concrete pad with a centered floor drain. The perimeter fencing shall be 12 feet high chain link fence supported by 2 3/4 galvanized steel posts, maximum 8 feet on center. The chain link shall be 2-inch grid, 6 gauge chain link fabric with knuckled selvage at top and bottom. All chain link shall be covered on the inside with #36 nylon netting, 1 3/4 square inch, latex treated, with poly rope border, or approved equals. The chain link shall be fastened with screen rings 18 inches long on center. Each batting cage shall have two 120V outlets, located at the door end of the cage. Each batting cage shall have its own door with lockable latch.

9.4.13.4 Dugouts shall be located along the first and third baselines, behind the backstop wings. They shall consist of concrete pads at field grade that are sloped away from the field, and surrounded by an 8 foot high 6 gauge chain link fence. The top of the dugout shall be a metal roof attached at a 9-foot height to the backstop wing, and at the top of the 8-foot high dugout fence. The dugouts shall be 30 feet long, 10 feet wide, and equipped with a 25 foot long aluminum bench, a bat rack, and a latching gate to the infield.

9.4.13.5 30 amp electrical outlets shall be placed behind the backstop at home plate (1) and behind both dugouts.

9.4.13.6 The fields will typically be crowned in the center with drainage to the sides. However, if the specific site or field overlay makes this drainage pattern unacceptable, other drainage patterns may be considered. Control boxes and drainage grates shall not be located on playing fields and shall be vandal resistant. All drain pipes coming from drains with exposed grates, will be a minimum of 6-inch diameter. Any turns in the pipe greater than a 45 degree angle will be made with sweep ells. All turf infields and all infields in Community Parks shall have approved sub surface drains designed to remove the water from the site (such as to storm drains).

9.4.13.7 Field gradients shall vary from site to site. Field gradients will range from 1.00 to 1.25 percent for skinned and turf infields and from 1.25 to 1.50 percent for outfield turf.

9.4.13.8 The preferred field orientation places the back of the home plate facing due north to northeast, and the first baseline running west. However, optimum utilization of the site may require variations from this preferred orientation.

9.4.13.9 Infields and base paths shall be covered with a 6 inch deep composition of 45 percent brick dust, 10 percent clay and 25 percent Turface MVP, unless requested to be a turf infield by City staff.

9.4.13.10 Home plate, bases, and the pitching rubber shall be provided at the time of construction, but shall be installed by the City. For ball fields with turf infields, a pitcher's mound cover and a home plate cover shall be provided.

9.4.13.11 All infields shall have an automatic irrigation watering system that is capable of watering all infield areas. Sufficient number of valves shall be provided depending on the available pressure and the size of the main line at the site. Sprinklers shall be installed along the perimeter of the infield area flush with the surface. The sprinkler heads shall have rubber tops. Valves and valve boxes shall be installed at the end of the dugout fence, on the spectator side of the fence. Valves shall be 1 1/2 -inch to 2-inch ball type, made of bronze with rubber coated handles. Valves shall be installed in valve boxes at least 14 inches by 20 inches, and installed per industry standards.

9.4.13.12 Lighting will be included at community and neighborhood park sites with athletic fields whenever possible and as deemed appropriate by the City. When lights are provided for athletic fields, lighting levels shall be per City Lighting Standards in effect at the time of City acceptance of the facility. Light poles shall be located behind the backstop, wings

parallel to first and third baselines, and outside the area of play. The number of poles and lamps required shall be determined by the field configuration and the photometric measurements. Lighting level requirements vary with each type of field. Security lights shall be located halfway down the poles, not to exceed 30 feet in height, and illuminate the dugouts when field lights are off poles within the fenced playing areas shall be padded.

9.4.13.13 Permanent outfield fencing shall be required where there is no field overlay. All permanent fencing shall be a minimum 8 feet high and constructed of 6-gauge chain link. The fences shall have top, center, and bottom rails. For permanent fencing there shall be concrete mow strips and the fence will be covered with windscreen fabric. When field overlay occurs, temporary fencing shall be provided that is 3 feet high made of flexible mesh. Permanent fencing shall have a poly fence safety cap along its distance

9.4.13.14 All poles within or in the vicinity of the playing area that are not protected by a fence shall have six 6 feet high pole pads.

9.4.13.15 Three (3) quick coupler valves shall be placed as follows: two along the field lines near the fence at the dugouts, and one in the grass area immediately behind the second base.

9.4.13.16 A concrete spectator area is required at all community and park sites and at all regulation baseball fields. Although the spectator area is desirable in neighborhood parks, each site shall be evaluated for appropriateness, technical feasibility and financial impact. Spectator areas shall consist of five (5) rows of aluminum bleachers placed on a concrete pad. Companion seating for wheelchair users shall be provided within or immediately adjacent to each bleacher. All concrete shall drain away from the playing field.

9.4.13.17 Turf type shall be a Hybrid Bermuda variety and installed by stolonizing, sodding, or another acceptable method.

9.4.13.18 Regulation baseball fields shall meet the following requirements:

Base Length:	90 feet.
Mound size:	18 feet diameter, 10 inches high.
Infield radius:	95 feet from center of the mound. Infield shall be turf with Turface MVP for base paths, batters area and mound to manufacturer's specifications.
Pitching rubber:	60 feet 6 inches from back point of home plate to front of rubber.
Foul line to home plate:	Minimum 300 feet, ideal 310 feet to 340 feet.
Center field to home plate:	Minimum 380 feet; ideal 380 feet to 400 feet.
Backstop to home plate:	50 feet

Minimum setback:	125 feet from home plate/foul lines to street right of way, sidewalk or building.
Field drainage:	A sub grade infield drainage system shall be installed for all regulation fields.
Scorekeepers area:	An elevated concrete scorekeeper's area shall be provided behind the backstop, directly behind home plate.
Spectator area:	Required.
Backstop:	Permanent winged style backstop required.
Lighting:	Minimum maintained lighting levels shall be 40 to 50 foot candles infield and 20 to 30 foot candles outfield.

9.4.13.19 Youth baseball and softball fields shall meet the following requirements:

Base Length:	60 feet, 70 feet.
Mound distance/Type:	44 feet (12 feet diameter, 4 inches high) 48 feet (12 feet diameter, 6 inches high). Mound to be constructed by City after facility acceptance
Infield radius:	65 feet from center of mound.
Pitching rubber to home plate:	Softball: 38 feet or 40 feet from back point of home plate to front of rubber. Baseball: 44 feet, 46 feet, or 48 feet from back point of home plate to front of rubber.
Foul line to home plate:	200 feet.
Backstop to home plate:	30 feet.
Minimum setback:	75 feet from home plate/foul lines to street, right of way, sidewalk, or building.
Field drainage:	A sub grade infield drainage system shall be installed for all regulation fields.
Scorekeepers area:	An elevated concrete scorekeeper's area shall be provided behind the backstop, directly behind home plate.
Backstop:	Permanent winged style backstop required.

9.4.13.20 Adult softball fields shall meet the following requirements:

Base Length:	60 feet, 65 feet
Infield radius:	65 feet from center of rubber.
Pitching Rubber:	50 feet from back point of home plate to front of rubber.
Foul line to home plate:	275 feet minimum.
Backstop to home plate:	30 feet.
Minimum setback:	125 feet from home plate /foul lines to street right of way, sidewalk or building.
Backstop:	Permanent winged-style backstop required.
Lighting:	Minimum maintained lighting levels shall be 20 to 30 foot candles infield, 15 to 20 foot candles outfield.

9.4.13.21 Backstop and spectator Areas

a. Provide for an unobstructed area minimum 4 feet wide in front of and on each side of the bleachers, and minimum 6 feet wide at the rear of the bleachers shall be provided for accessibility. Concrete walkways shall be provided for access to the area.

b. Backstops and wings shall be 30 feet in height. Back of backstop, centered behind the home plate, shall be 20 feet long, with each wing extending 90 feet parallel to each foul line, including front of the dugout.

c. The area behind the backstop and wings, from first base to third base, shall be poured concrete as shown in the Illustration Section. The minimum width of the concrete pad shall be 24 feet, including the bleachers and the access area.

d. An accessible drinking fountain shall be located on the concrete area behind home plate, providing a 15 foot radius to allow space for pedestrian traffic.

9.4.14 Soccer and Football fields

9.4.14.1 Whenever possible the long axis of the fields should extend north/south, at right angles to the late afternoon sun's rays.

9.4.14.2 Multiple fields placed adjacent to one another shall be placed side-by-side. Fields may be "off-set" to facilitate layout, but may not be end-to-end. The minimum separation between fields shall be ten (10) feet.

9.4.14.3 An area, minimum 10 feet wide shall be provided around the field where possible, with no trees, berms, planters, or sidewalks within 10 feet of the sidelines. If possible, a minimum of 6 feet from each corner of the field will be level grass with no obstructions.

9.4.14.4 Field turf shall be turf type 100% Hybrid Bermuda variety. Hybrid Bermuda shall be installed by stolonizing, sodding, or an acceptable alternative.

9.4.14.5 The acceptable gradient range for soccer fields is 1.5 to 1.75 percent.

9.4.14.6 Fields should typically use a corner pitch drainage pattern; however, field over lays and site situations may require the use of other patterns. Permanent, dedicated, full time fields will have approved subsurface drains under the penalty and the goal areas that will remove the water from the field.

9.4.14.7 The average minimum maintained lighting level shall be 20 to 30 foot-candles over the entire field area. The number of poles and lamps required shall be determined by field configuration and photometric measurements.

9.4.14.8 Field overlay situations often occur in order to optimize the recreational opportunities. In case of an overlay, fields shall be placed in arrangement acceptable to the City. In any field overlay, the edge of the soccer field shall be a minimum of 10 feet from the edge of the skinned portion of the baseball/softball field.

9.4.15 Basketball Courts

9.4.15.1 Playing area shall be 90 feet by 50 feet for full outdoor courts and 45 feet by 50 feet for half courts. Courts shall have a poured concrete surface five (5) feet wider in each direction than the playing area. A medium broom finish shall be used to prevent slipping.

9.4.15.2 There shall be a 10 feet minimum distance between courts that are placed side-by-side. Where two or more courts are provided at one site, the courts should be configured for multi-purpose use.

9.4.15.3 Court gradient shall be of 1.0 to 1.5 percent.

9.4.15.4 All markings on the playing surface shall be applied using a wear-resistant, colored substance. All lines shall be a minimum 2 inches wide unless otherwise noted.

9.4.15.5 All goals shall have capped 5 feet 9/16 inch straight posts with heavy duty adjustable bracing, a ¼ foot galvanized steel plate, rectangular 4 feet by 6 feet backboard offset, and double rim goal. All goals are to have nylon nets and be set to regulation height. All goals are to have 6-foot offsets and a 7-foot pole pad with cable laces and hog rings. The nets provided shall be double headband 3mm polyurethane twin with an extra row of mesh in the net body. Goals shall have a lifetime warranty.

9.4.16 Lighting Facilities

9.4.16.1 Park lighting design shall be completed by a lighting design professional. The City shall have final review and approval of all such design. All lighting in public ROW (including street and pedestrian lighting) shall be coordinated and must be approved by Public Works. Illumination levels shall be provided for all plans extending 100 feet beyond planning boundaries in all directions. Light pole mow strips shall be provided for all light poles located in lawn areas. Utility facilities (transformers, switch cabinets, etc.) should be easily accessible by maintenance vehicles and grouped to the greatest extent possible.

9.4.16.2 The Park's lighting system shall be designed to:

a. Provide a safe lighting system for the welfare of participants and spectators; and

b. Mitigate the environmental impact of recreational athletic field lighting on the community; and

c. Ensure that the standards established, continue to be met over the life of the lighting system, as well as during the planning and initial installation.

THIS PAGE LEFT BLANK INTENTIONALLY

APPENDIX A
STANDARDS

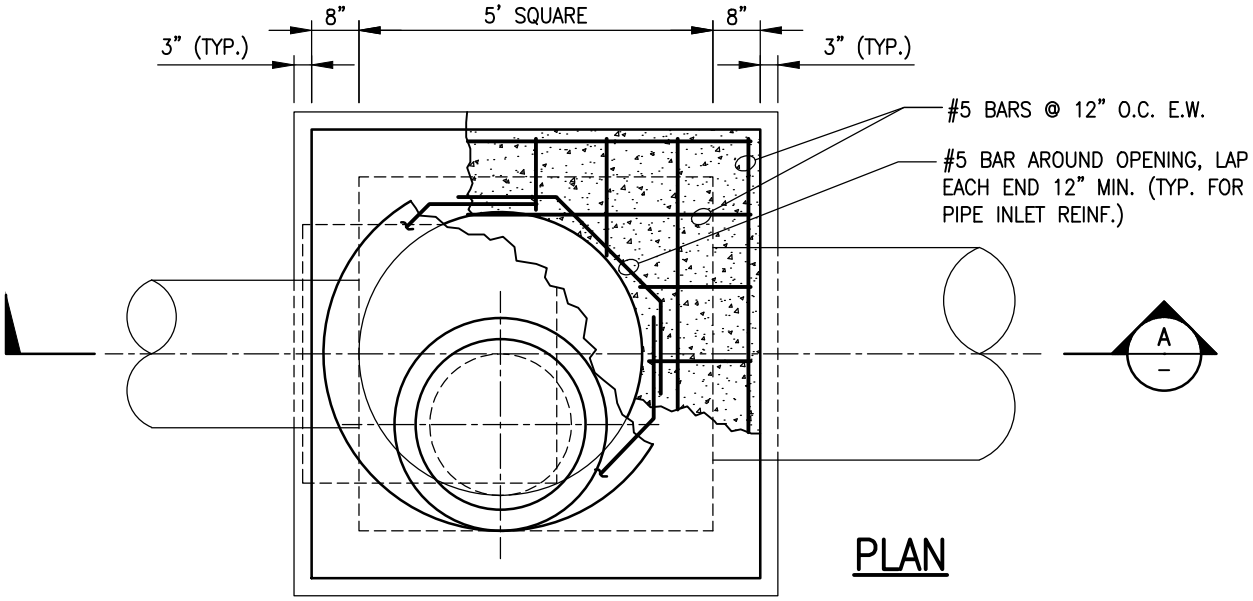

PLAN

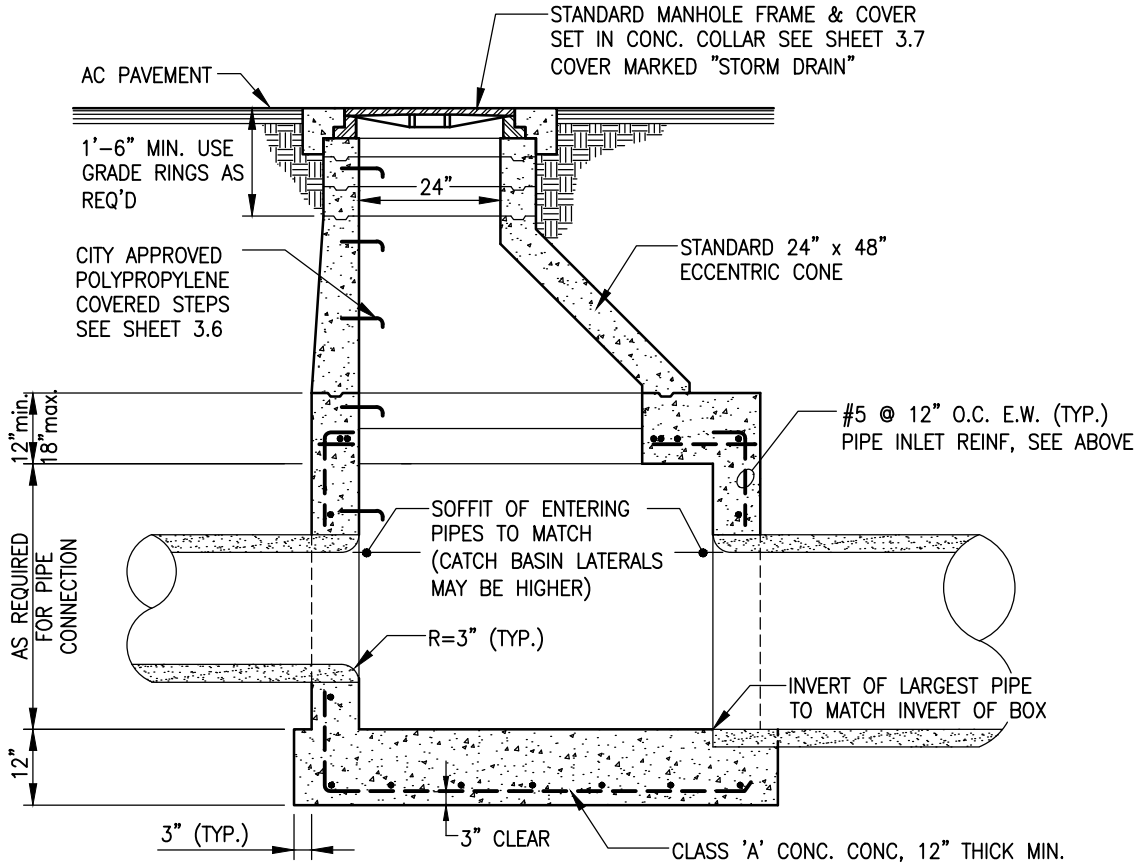

NOTE:
FOR BACKFILL REQMTS, SEE PIPE BACKFILL DETAILS SHT. 4.1

SECTION

		CITY OF TEHACHAPI
		STORM DRAIN JUNCTION MANHOLE DETAIL
1/15	ADDENDUM NO. 2	
11/07	ADDENDUM NO.1	BOYLE ENGINEERING CORPORATION — DATE DRAWN 01/06 — SHEET NO. 2.1
DATE	REVISION	

DWG: S:\T08_standard details\L1691_2-1.dwg USER: campbellv
DATE: Dec 09, 2014 2:49pm XREFS: BORDER

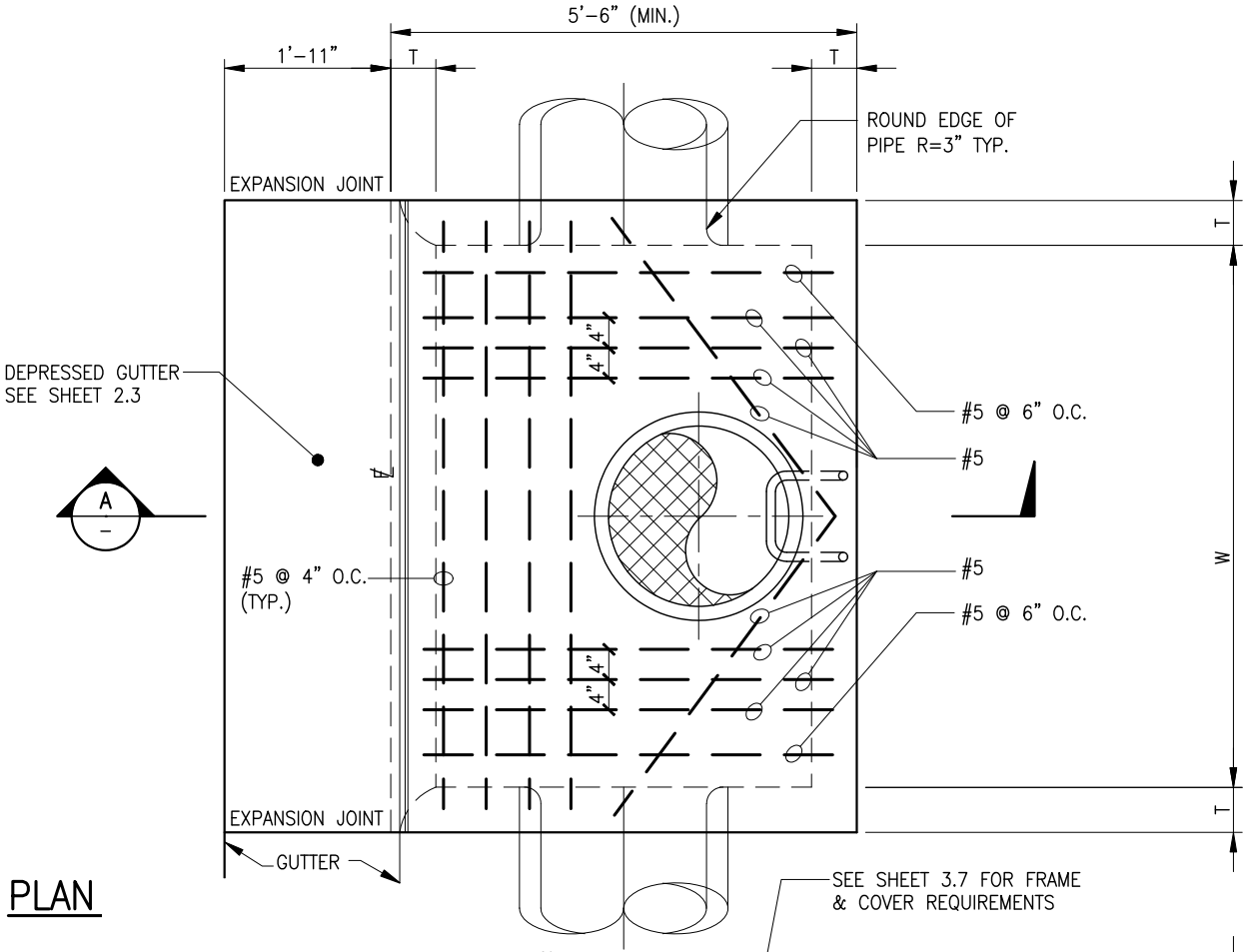

PLAN

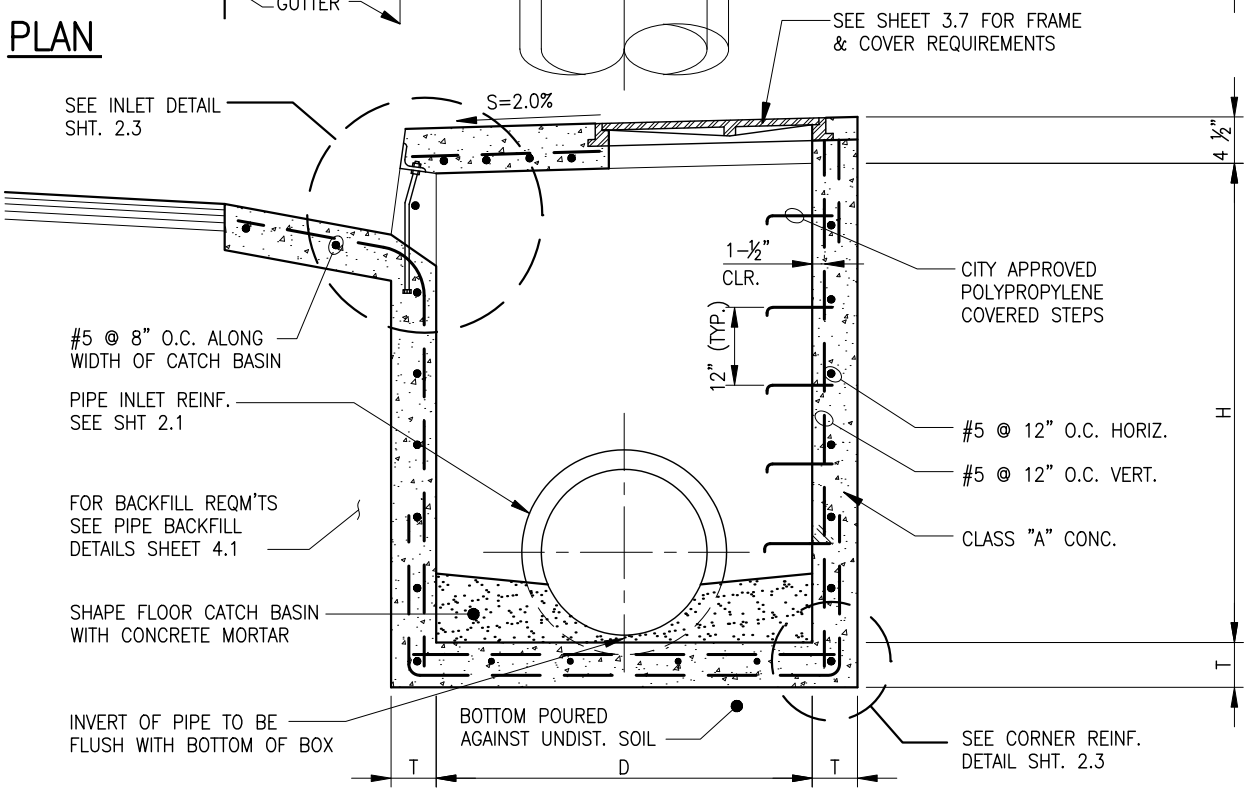

SECTION A

NOTE:
FOR VARIABLE DIMENSIONS SEE SHEET 2.3

DATE	REVISION
11/07	ADDENDUM NO.1

CITY OF TEHACHAPI

STORM DRAIN
CURB OPENING CATCH BASIN DETAIL

BOYLE ENGINEERING CORPORATION

DATE DRAWN	SHEET NO.
01/06	2.2

DWG: S:\TOR_standard details\L1691_2-2.dwg USER: dghilarducci
DATE: Mar 03, 2008 1:23pm XREFS: BORDER

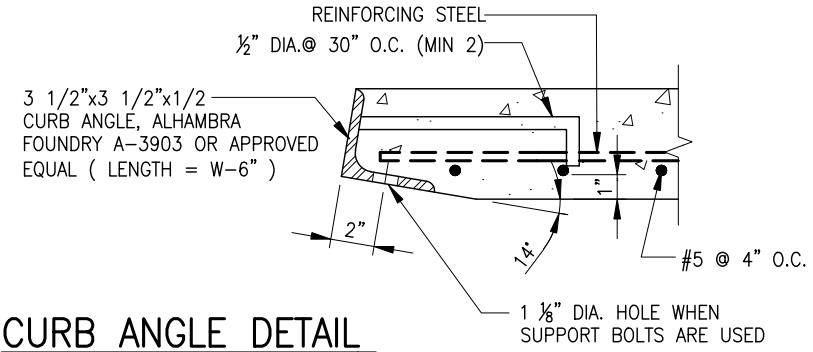

CURB ANGLE DETAIL

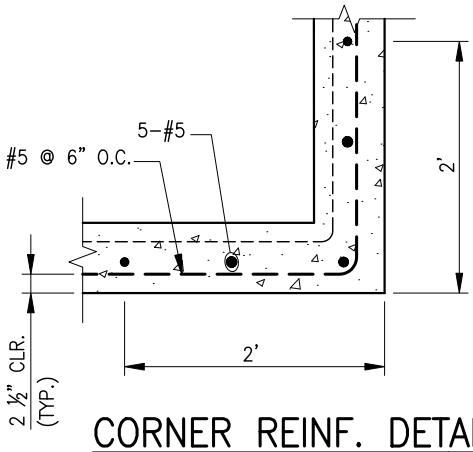

CORNER REINF. DETAIL

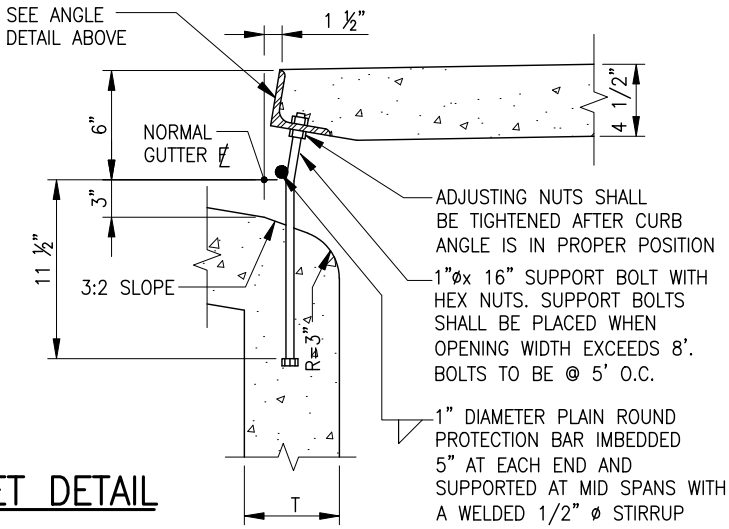

INLET DETAIL

WALL THICKNESS "T" SHALL BE AS FOLLOWS

W>8', T=8"
H>8', T=8"
OTHERWISE T=6"

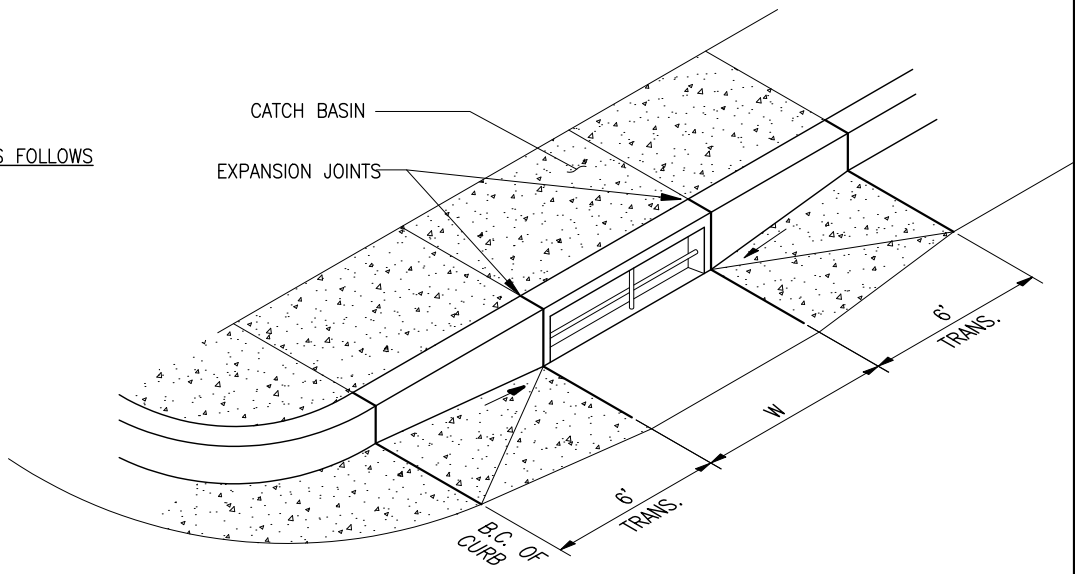

GUTTER DEPRESSION DETAIL

		CITY OF TEHACHAPI
		CURB OPENING CATCH BASIN DETAILS
11/07	ADDENDUM NO.1	BOYLE ENGINEERING CORPORATION — DATE DRAWN 01/06 — SHEET NO. 2.3
DATE	REVISION	

DWG: S:\T08_standard details\L1691_2-3.dwg USER: dghilarducci
DATE: Mar 03, 2008 1:23pm XREFS: BORDER

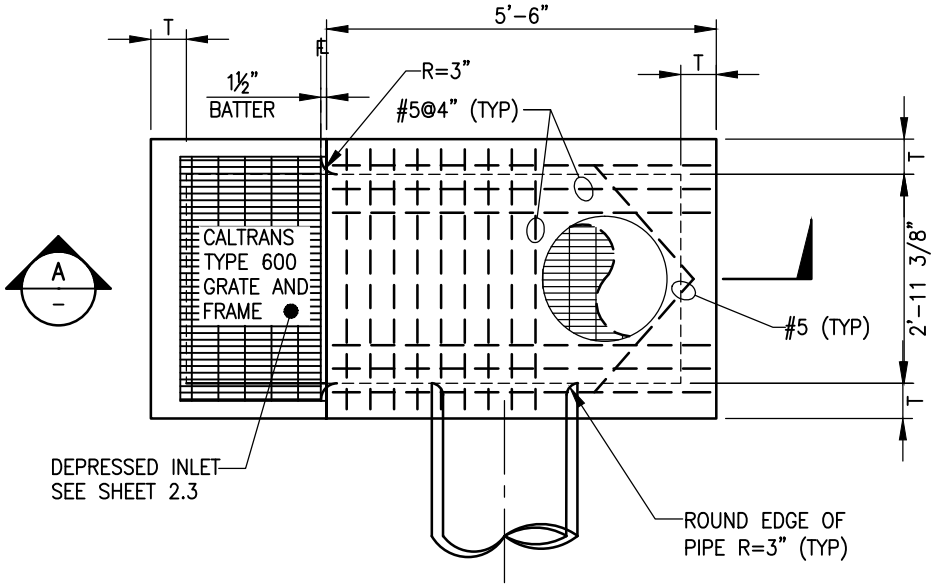

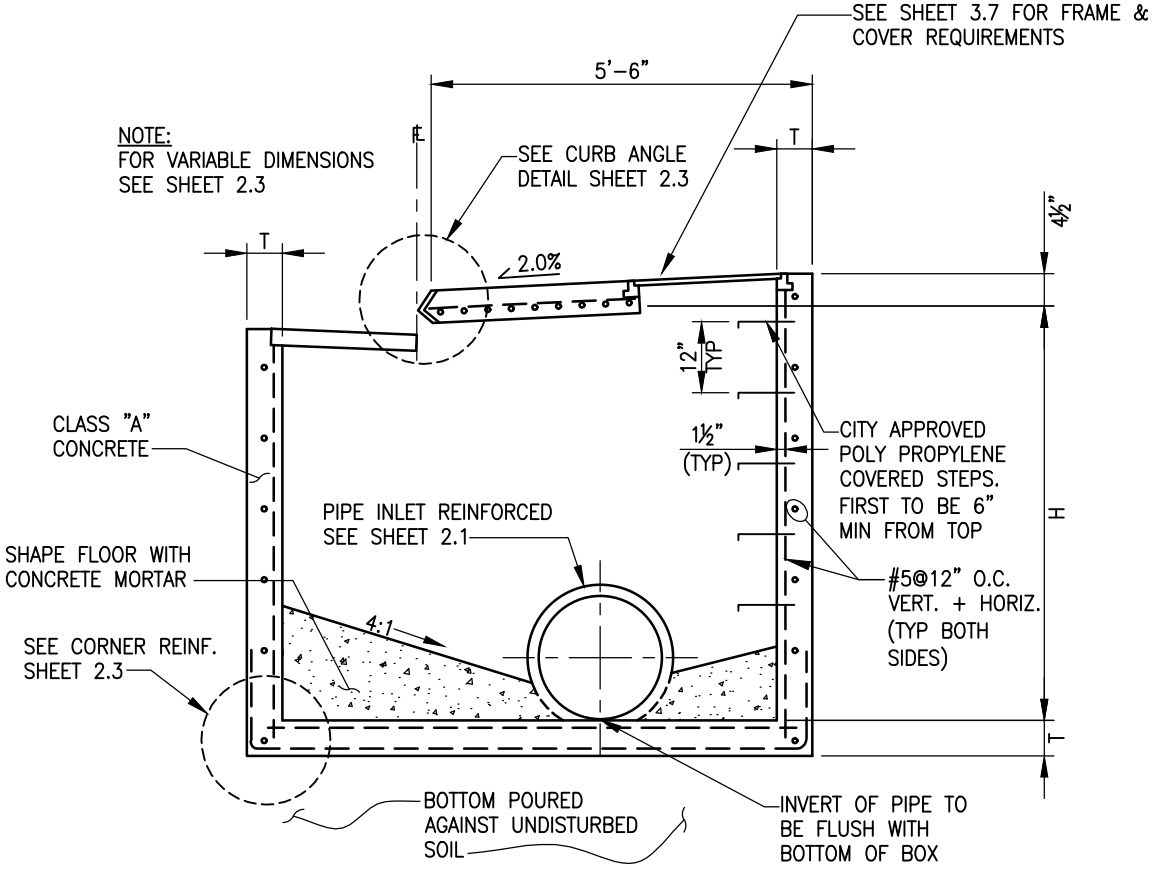

		CITY OF TEHACHAPI		
		STORM DRAIN COMBINATION CATCH BASIN DETAIL		
11/07	ADDENDUM NO.1	BOYLE ENGINEERING CORPORATION	DATE DRAWN 02/06	SHEET NO. 2.4
DATE	REVISION			

DWG: S:\T08_standard details\L1691_2-4.dwg USER: campbeliv
DATE: Dec 09, 2014 2:39pm XREFS: BORDER

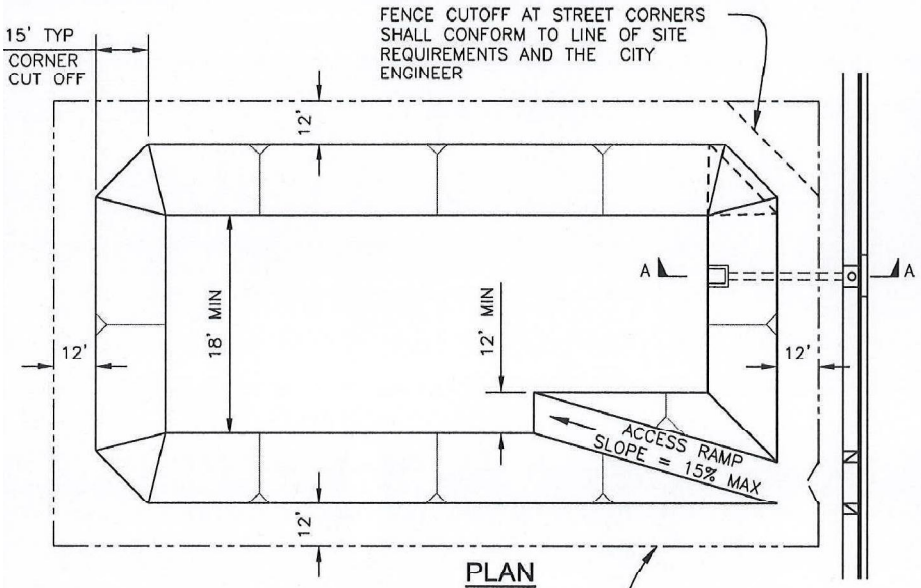

PLAN

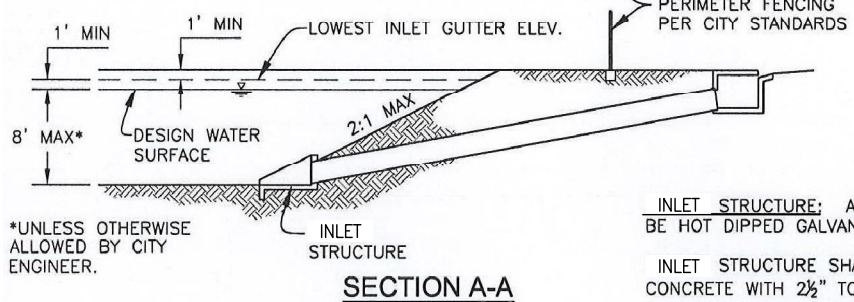

SECTION A-A

GENERAL NOTES:

ALL WORK SHOWN SHALL CONFORM TO THE APPLICABLE SECTIONS OF THE CURRENT SPECIFICATIONS ENTITLED "STANDARD SPECIFICATION, STATE OF CALIFORNIA, BUSINESS AND TRANSPORTATION AGENCY, DEPARTMENT OF TRANSPORTATION", LATEST EDITION AND THE FOLLOWING GENERAL NOTES:

DRAINAGE BASIN: DRAINAGE BASIN SHALL BE A MINIMUM OF ONE BUILDABLE LOT, FRONTING ON A STREET, AND HAVING A SHAPE AND LOCATION ACCEPTABLE TO THE CITY ENGINEER.

LANDSCAPED PARK DRAINAGE BASINS SHALL NOT BE GOVERNED BY THIS STANDARD.

BASIN SITE SHALL BE DEEDED IN FEE TO THE CITY OF TEHACHAPI.

SIDE SLOPES SHALL NOT EXCEED 2:1.

ALL NEW DRAINAGE BASINS INCLUDING AREA BETWEEN FENCE & SIDEWALK SHALL BE STERILIZED WITH A PERMANENT STERILANT SUCH AS HVVAR. ADDITIONAL TREATMENT TO THE AREA BETWEEN FENCE AND SIDEWALK SHALL BE AS DIRECTED BY THE ENGINEER. APPLICATION RATE IS TWENTY-FIVE (25) POUNDS PER ACRE. A REPRESENTATIVE OF PUBLIC WORKS SHALL BE ON SITE AT TIME OF STERILIZATION.

BASIN CAPACITY SHALL CONFORM TO CITY OF TEHACHAPI STANDARDS AND AS APPROVED BY THE CITY ENGINEER.

CONCRETE RIP-RAP SHALL BE USED AT THE DISCHARGE STRUCTURES AT THE DISCRETION OF THE CITY ENGINEER.

INLET STRUCTURE: ALL EXPOSED METAL IN THE INLET STRUCTURE SHALL BE HOT DIPPED GALVANIZED AFTER FABRICATION.

INLET STRUCTURE SHALL BE CONSTRUCTED WITH CLASS "A" 6 SACK, CONCRETE WITH 2½" TO 6½" SLUMP.

CONCRETE SHALL CONTAIN NO ADDITIVES UNLESS PRIOR WRITTEN APPROVAL IS OBTAINED FROM THE CITY ENGINEER.

CONCRETE SHALL BE CURED WITH A WHITE PIGMENTED CURING COMPOUND COMPLYING TO SECTION 90-7.01B OF THE STANDARD SPECIFICATIONS.

NO PIPE BELLS SHALL BE PLACED IN STRUCTURE.

PVC PIPE SHALL NOT BE EXPOSED TO SUNLIGHT IN THE INLET STRUCTURE.

PERIMETER FENCING: PERIMETER FENCE AND GATES SHALL CONFORM TO THE CITY STANDARDS. LOCATION AND NUMBER OF DRIVE GATES IN FENCE TO BE DETERMINED BY THE CITY ENGINEER.

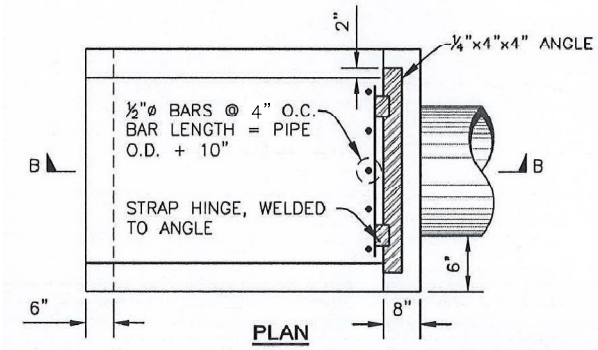

PLAN

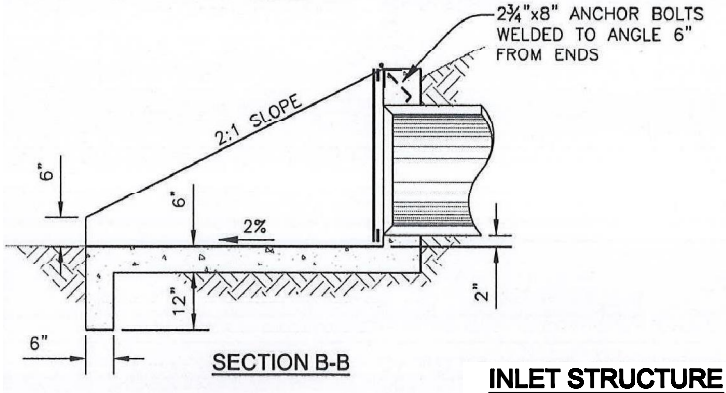

SECTION B-B

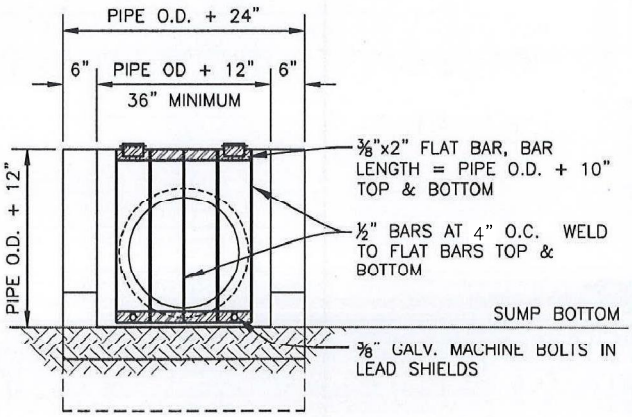

ELEVATION

INLET STRUCTURE

		CITY OF TEHACHAPI
		DRAINAGE BASIN AND INLET STRUCTURE
11/07	ADDENDUM NO.1	BOYLE ENGINEERING CORPORATION — DATE DRAWN 01/06 — SHEET NO. 2.5
DATE	REVISION	

DWG: S:\T08_standard details\L1691_2-5.dwg USER: dghilarducci
DATE: Mar 03, 2008 1:22pm XREFS: BORDER

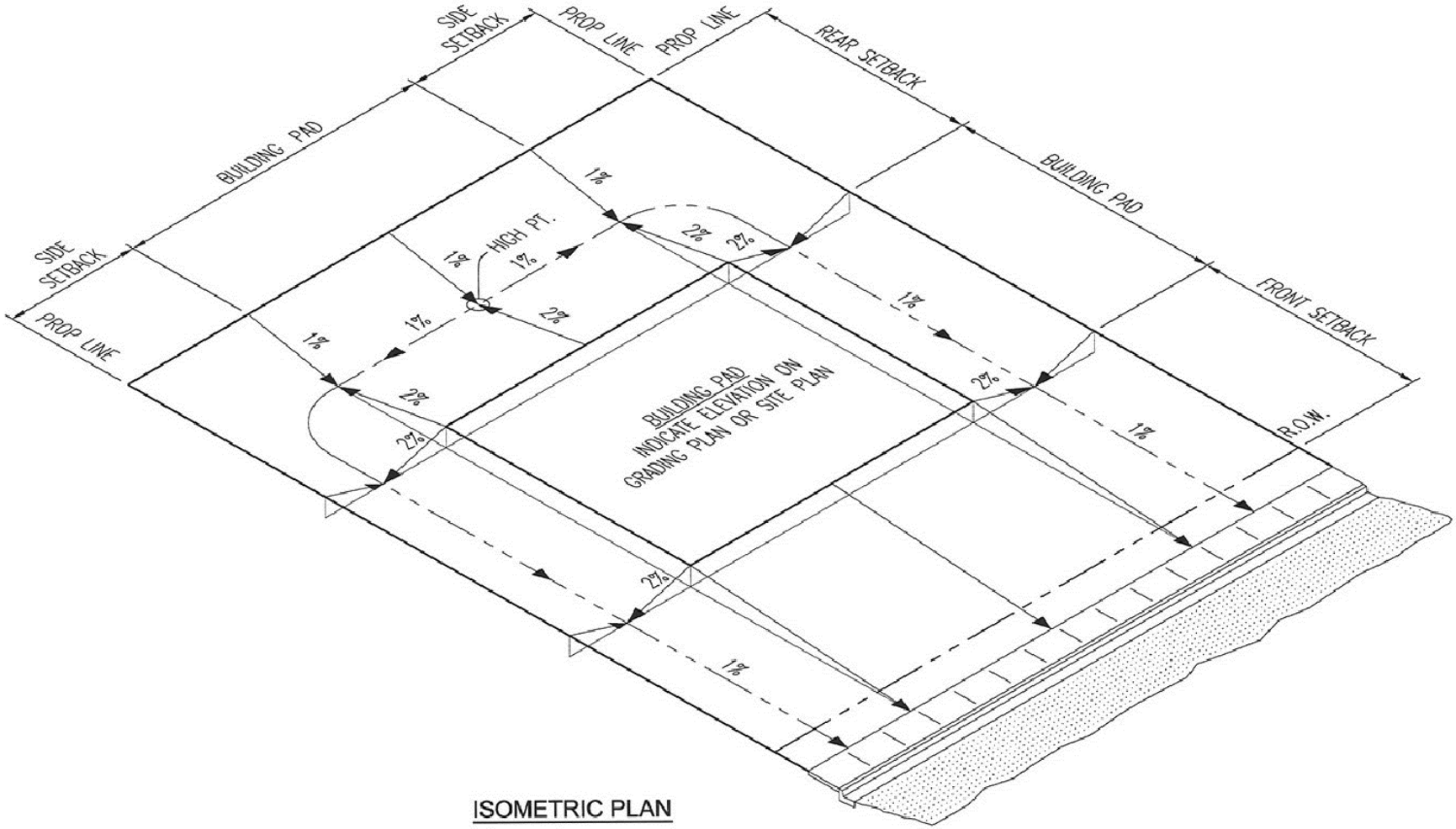

ISOMETRIC PLAN

GENERAL NOTES:

1) AT A MINIMUM, BUILDING FINISH PAD ELEVATION SHALL BE ESTABLISHED SO THAT THE FINISH FLOOR ELEVATION IS A MINIMUM OF TWELVE (12) INCHES PLUS 2% SLOPE FROM THE LOWEST ADJACENT FLOWLINE TO THE FINISH FLOOR IN ACCORDANCE WITH CHAPTER 18, SECTION 1806.5.5 OF THE 2001 CALIFORNIA BUILDING CODE.

2) SLOPE AWAY FROM THE STRUCTURE SHALL BE A MINIMUM OF 2% IN ACCORDANCE WITH APPENDIX CHAPTER 33, SECTION 3315.4 OF THE 2001 CALIFORNIA BUILDING CODE.

3) BUILDING FINISH PAD ELEVATIONS SHALL BE ESTABLISHED TO ALLOW A 1% DRAINAGE SWALE TO BE CONSTRUCTED FROM THE MIDDLE OF THE LOT'S BACKYARD TO THE STREET.

4) GRADING BETWEEN LOTS SHALL BE PER STANDARD DETAIL 2.6.

5) SIDE YARD DRAINAGE SWALES SHALL BE ADJUSTED TO AVOID ANY AND ALL UTILITY STRUCTURES.

DATE	REVISION

CITY OF TEHACHAPI

TYPICAL LOT GRADING PLAN

BOYLE ENGINEERING CORPORATION

DATE DRAWN 01/06

SHEET NO. 2.6

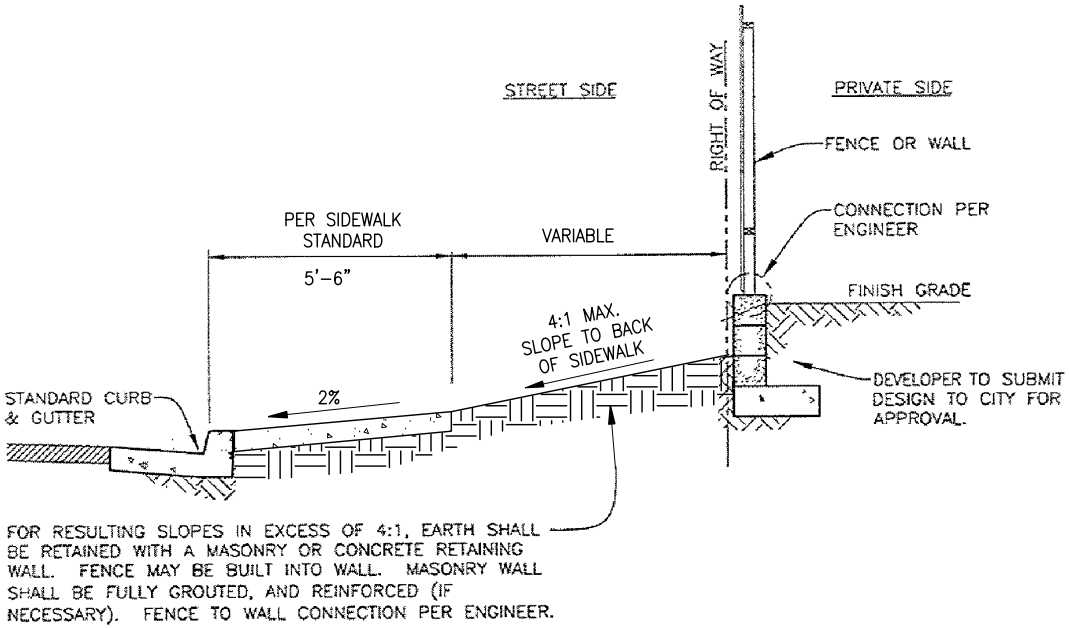

SIDE YARD SLOPE & RETAINAGE REQUIREMENT

GENERAL NOTES:

WOOD RETAINING STRUCTURES SHALL NOT BE PERMITTED.

RETAINED HEIGHTS OVER 24" SHALL BE PROVIDED WITH DRAINAGE FACILITIES THROUGH THE WALL.

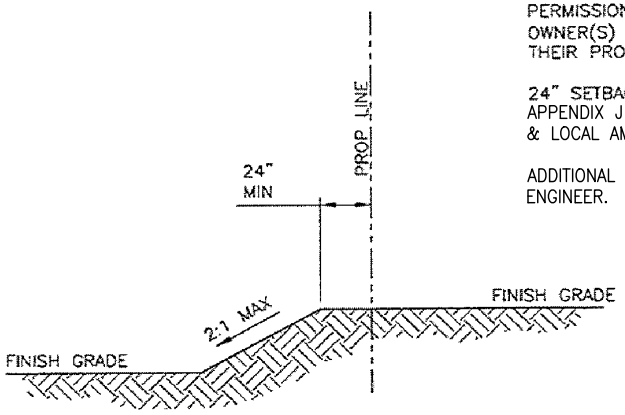

GRADING BETWEEN LOTS

GENERAL NOTES:

PERMISSION MUST BE OBTAINED FROM OFFSITE PROPERTY OWNER(S) BEFORE GRADING WORK CAN BE PERFORMED ON THEIR PROPERTY.

24" SETBACK MAY BE INCREASED IN ACCORDANCE WITH APPENDIX J OF THE CALIFORNIA BUILDING CODE & ANY STATE & LOCAL AMMENDMENTS.

ADDITIONAL REQUIREMENTS MAY APPLY PER THE CITY ENGINEER.

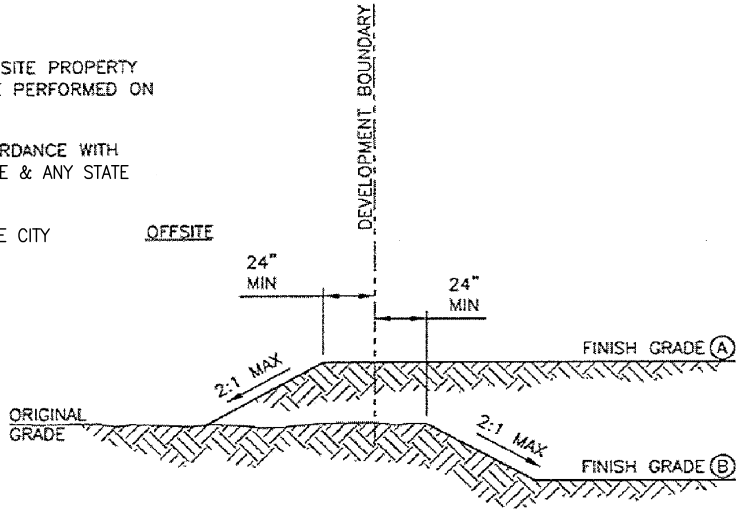

GRADING AT DEVELOPMENT BOUNDARY

DATE	REVISION
11/07	ADDENDUM NO.1

CITY OF TEHACHAPI

TYPICAL LOT GRADING DETAILS

BOYLE ENGINEERING CORPORATION

DATE DRAWN 01/06

SHEET NO. 2.7

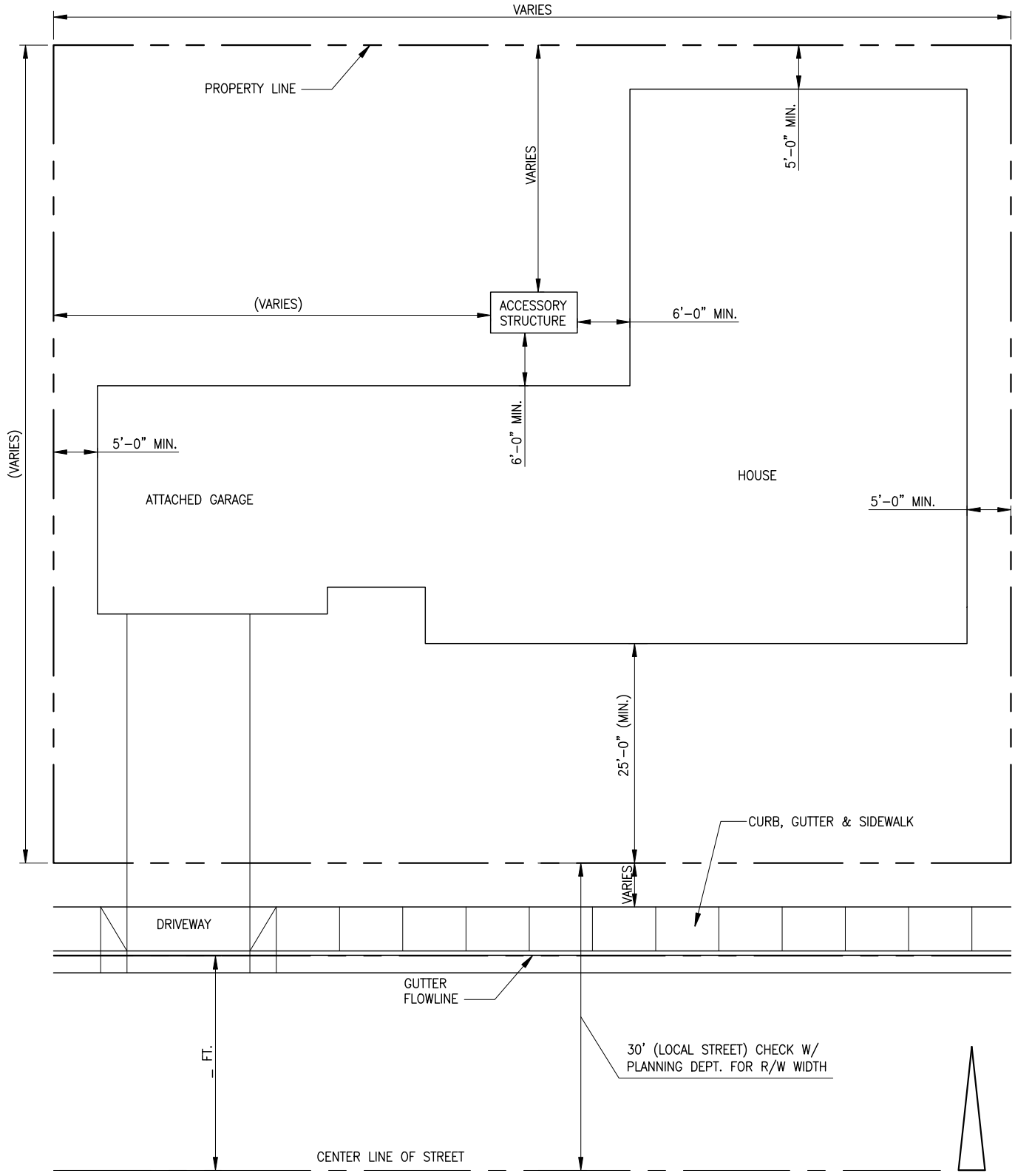

NOTES

1. SHOW EXISTING AND PROPOSED STRUCTURES.
2. INCLUDE STREET ADDRESS, LEGAL DESCRIPTION, AND ASSESSOR'S PARCEL NUMBER.
3. SHOW STREET NAMES, ALLEYS, AND EASEMENTS.

DATE	REVISION

CITY OF TEHACHAPI

TYPICAL PLOT PLAN

BOYLE ENGINEERING CORPORATION

DATE DRAWN	SHEET NO.
01/06	2.8

DWG: S:\T08_standard details\L1691_2-8.dwg USER: dghilarducci
DATE: Mar 03, 2008 1:20pm XREFS: BORDER

RAINFALL INTENSITY DURATION FREQUENCY CHART

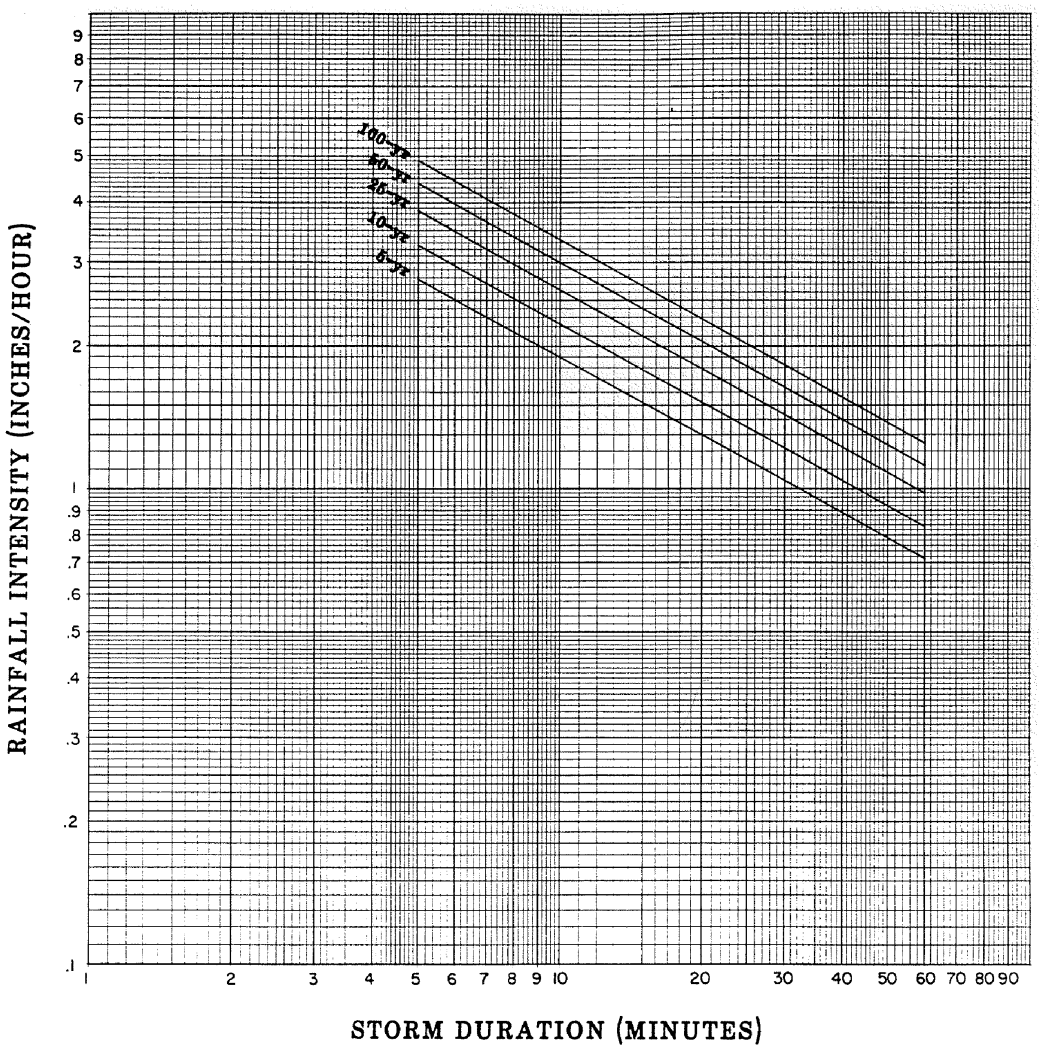

RUNOFF COEFFICIENT "C"

$$C = \begin{cases} 0.90 \times \left[a_i + \dfrac{(1-a_i)(I-F_p)}{I} \right], & \text{for } I > F_p \\ 0.90 \times a_i, & \text{for } I \le F_p \end{cases}$$

where F_p =

Residential or Commercial
0.93 in/hr for Type "A" Soil, CN=39
0.68 in/hr for Type "B" Soil, CN=61
0.48 in/hr for Type "C" Soil, CN=74
0.38 in/hr for Type "D" Soil, CN=80

See Figures C-2 & C-5, KCHM for non-residential or non-commercial

IMPERVIOUS AREA "a_i"

Single Family Residential

a_i =	0.10	2.5 acre lots
	0.20	1 acre lots
	0.30	2 - 3 dwelling units per acre
	0.40	3 - 5 dwelling units per acre
	0.50	5 - 8 dwelling units per acre
	0.60	8 - 10 dwelling units per acre
	0.80	> 10 dwelling units per acre

Multi Family Residential

a_i =	0.65	Condominiums
	0.80	Apartments

Other

a_i =	0.75	Mobile Home Parks
	0.90	Commercial or Industrial
	0.40	School
	0.15	Park

DATE	REVISION
11/07	ADDENDUM NO.1

CITY OF TEHACHAPI

RAINFALL INTENSITY-DURATION FREQUENCY (IDF) CHART

BOYLE ENGINEERING CORPORATION

DATE DRAWN	SHEET NO.
01/06	2.9

DWG: S:\T08_standard details\L1691_2-9.dwg USER: dghilarducci
DATE: Mar 03, 2008 1:20pm XREFS: BORDER

NOTE: FOR EXISTING SEWERS, CONNECTION SHALL BE MADE WITH ASTM C923 RESILIENT CONNECTOR ENCASED IN A 2-SACK SLURRY SUBJECT TO APPROVAL BY CITY.

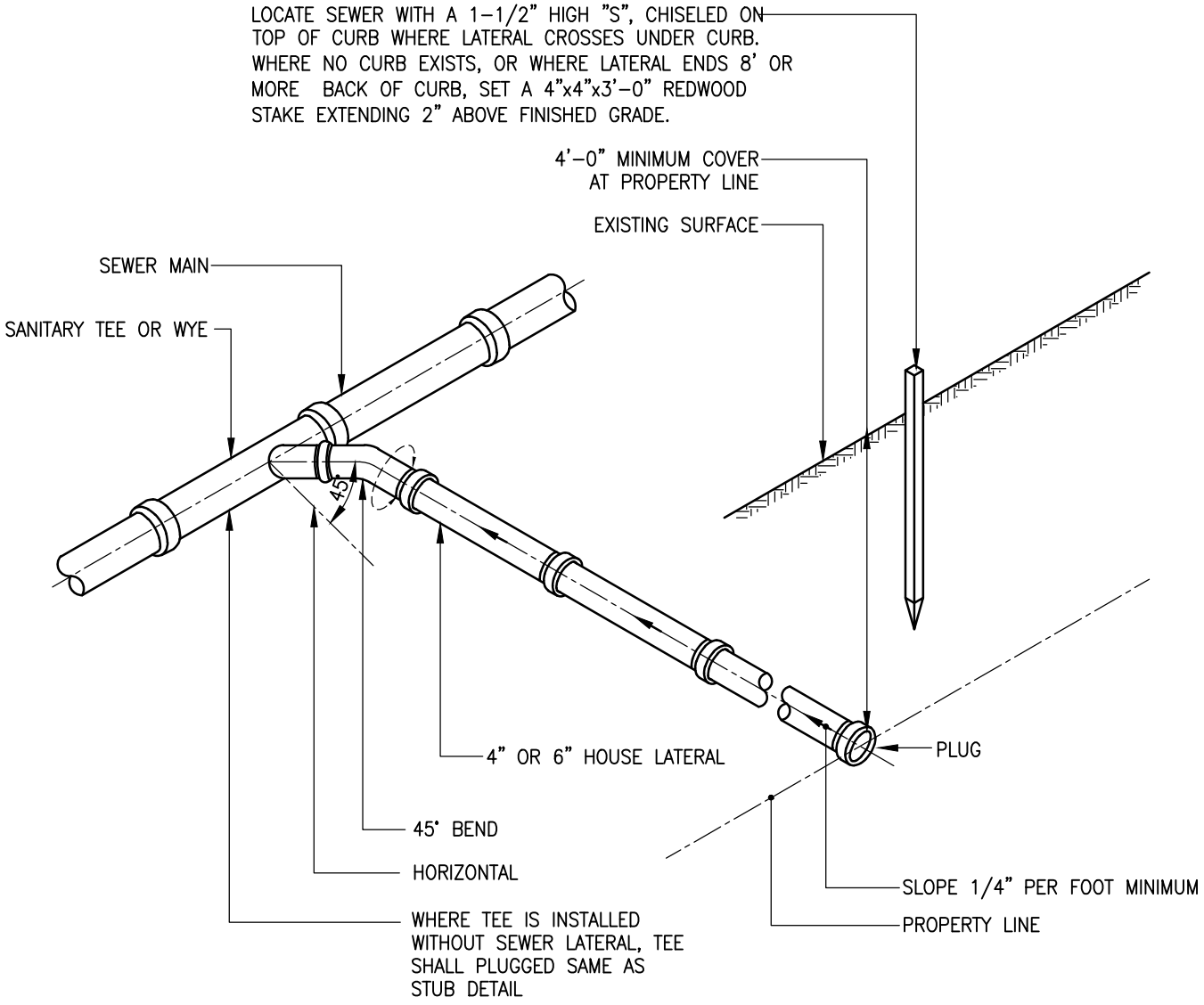

ISOMETRIC

DATE	REVISION	CITY OF TEHACHAPI		
		TYPICAL SEWER LATERAL		
		BOYLE ENGINEERING CORPORATION	DATE DRAWN 01/06	SHEET NO. 3.1

DWG: S:\T08_standard details\L1691_3-1.dwg USER: campbellv
DATE: Dec 09, 2014 2:37pm XREFS: BORDER

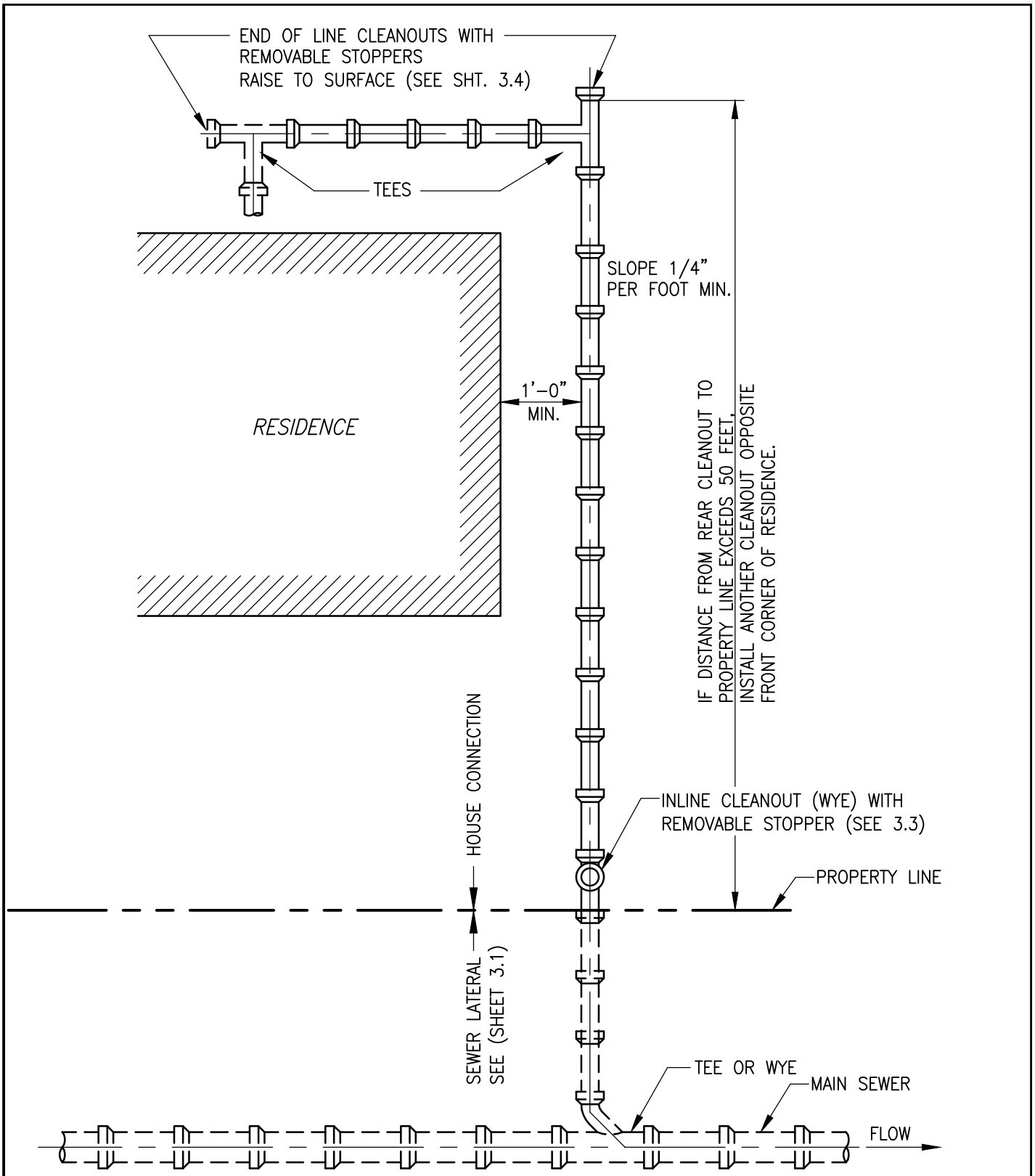

PLAN

		CITY OF TEHACHAPI		
		TYPICAL HOUSE CONNECTION		
1/15	ADDENDUM NO. 2	BOYLE ENGINEERING CORPORATION	DATE DRAWN 01/06	SHEET NO. 3.2
DATE	REVISION			

DWG: S:\T08_standard details\L1691_3-2.dwg USER: campbellv
DATE: Dec 11, 2014 2:07pm XREFS: BORDER

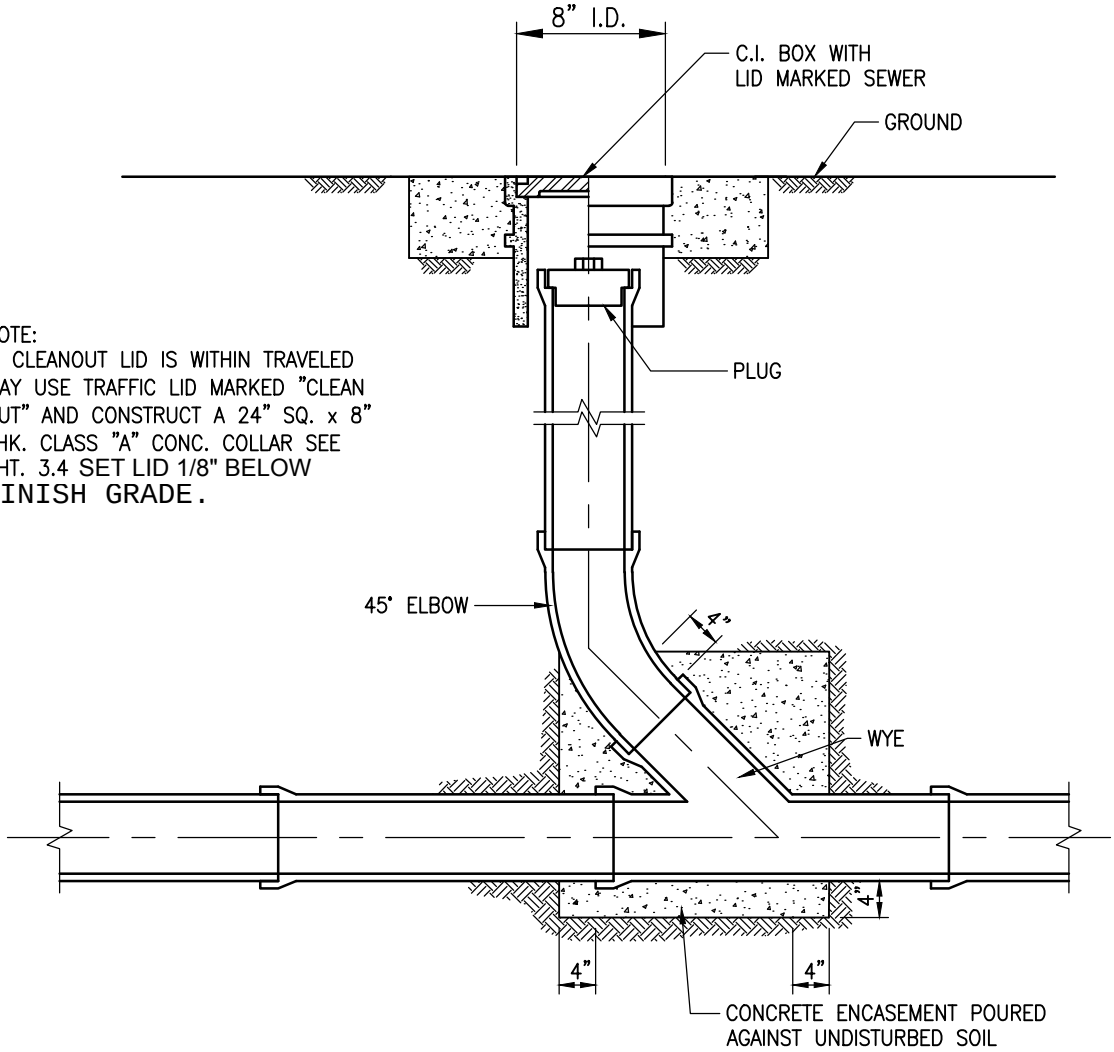

NOTE:
IF CLEANOUT LID IS WITHIN TRAVELED WAY USE TRAFFIC LID MARKED "CLEAN OUT" AND CONSTRUCT A 24" SQ. x 8" THK. CLASS "A" CONC. COLLAR SEE SHT. 3.4 SET LID 1/8" BELOW FINISH GRADE.

SECTION

		CITY OF TEHACHAPI		
		INLINE CLEANOUT		
1/15	ADDENDUM NO. 2	BOYLE ENGINEERING CORPORATION	DATE DRAWN 09/14	SHEET NO. 3.3
DATE	REVISION			

DWG: S:\T08_standard details\L1691_3-3.dwg USER: campbeliv
DATE: Dec 16, 2014 4:05pm XREFS: BORDER

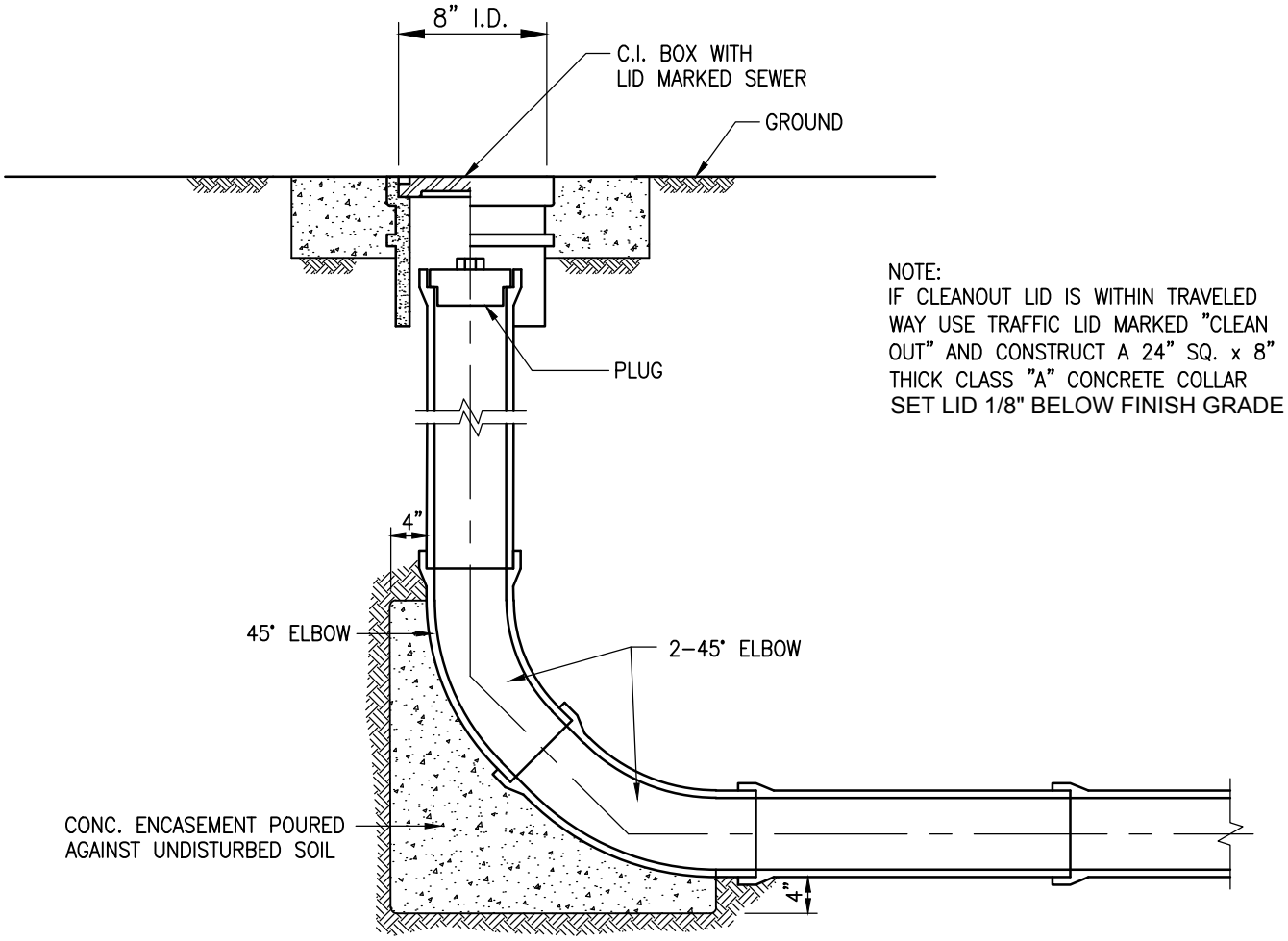

NOTE:
IF CLEANOUT LID IS WITHIN TRAVELED WAY USE TRAFFIC LID MARKED "CLEAN OUT" AND CONSTRUCT A 24" SQ. x 8" THICK CLASS "A" CONCRETE COLLAR SET LID 1/8" BELOW FINISH GRADE

S E C T I O N

		CITY OF TEHACHAPI		
		END OF LINE CLEANOUT		
1/15	ADDENDUM NO. 2	BOYLE ENGINEERING CORPORATION	DATE DRAWN 09/14	SHEET NO. 3.4
DATE	REVISION			

DWG: S:\T08_standard details\L1691_3-4.dwg USER: campbeliv
DATE: Dec 16, 2014 4:06pm XREFS: BORDER

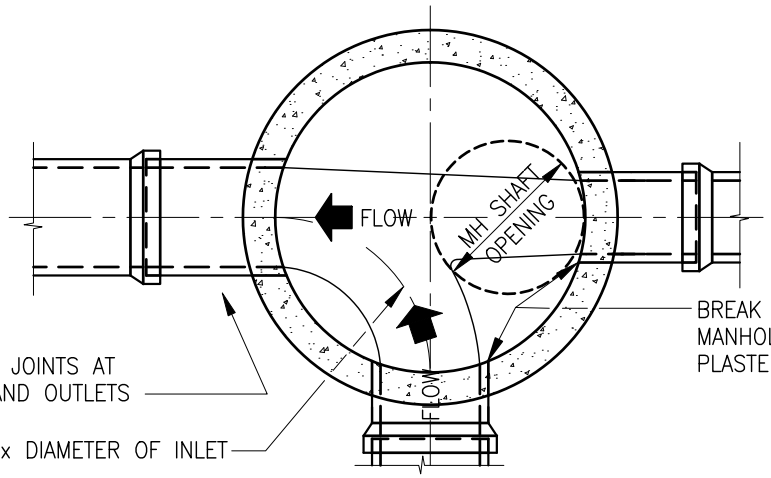

BREAK PIPE FLUSH WITH INSIDE OF MANHOLE WALL. BROKEN EDGES SHALL BE PLASTERED SMOOTH WITH CEMENT MORTAR

2' LONG JOINTS AT INLETS AND OUTLETS

RADIUS = 2x DIAMETER OF INLET

PLAN

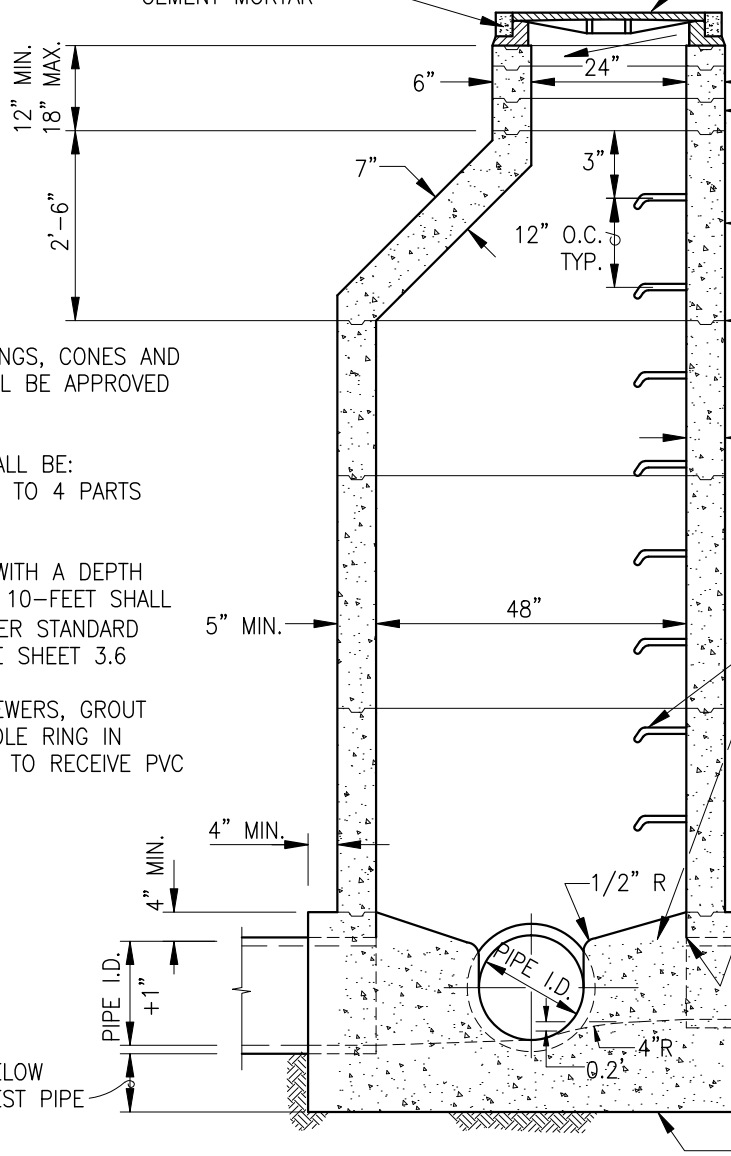

FOR MANHOLE TOP DETAILS SEE SHEET 3.7

24" DIA. COLLAR SECTIONS AS NEEDED. MAX. HEIGHT 6" PER SECTION

48" x 24" ECCENTRIC CONE SECTION

1/2" MORTAR OR "KENT SEAL" BETWEEN SECTIONS TO FORM WATER TIGHT JOINTS (TYPICAL)

5" REINF. PER ASTM C-478
6" UNREINF PER ASTM C-478

FOR BACKFILL REQUIREMENTS SEE PIPE BACKFILL DETAILS, SHEET 4.1

CITY APPROVED POLYPROPYLENE COVERED MANHOLE STEPS TYPICAL

SHAPE LEDGE AFTER MANHOLE IS SET

THE CROWN ELEVATION OF ALL PIPES SHALL BE THE SAME AS THE CROWN ELEVATION OF THE LARGEST.

POUR CLASS "A" CONCRETE BASE AGAINST UNDISTURBED SOIL

ELEVATION

NOTES:

1. MANHOLE RINGS, CONES AND SECTIONS SHALL BE APPROVED BY CITY.

2. MORTAR SHALL BE: I PART CEMENT TO 4 PARTS SAND.

3. MANHOLES WITH A DEPTH GREATER THAN 10-FEET SHALL BE 60" DIAMETER STANDARD MANHOLES. SEE SHEET 3.6

4. FOR PVC SEWERS, GROUT RUBBER MANHOLE RING IN MANHOLE BASE TO RECEIVE PVC PIPES.

DATE	REVISION
11/07	ADDENDUM NO.1

CITY OF TEHACHAPI

48" I.D. STANDARD MANHOLE

BOYLE ENGINEERING CORPORATION

DATE DRAWN	SHEET NO.
01/06	3.5

DWG: S:\T08_standard details\L1691_3-5.dwg USER: dghilarducci
DATE: Mar 03, 2008 1:42pm XREFS: BORDER

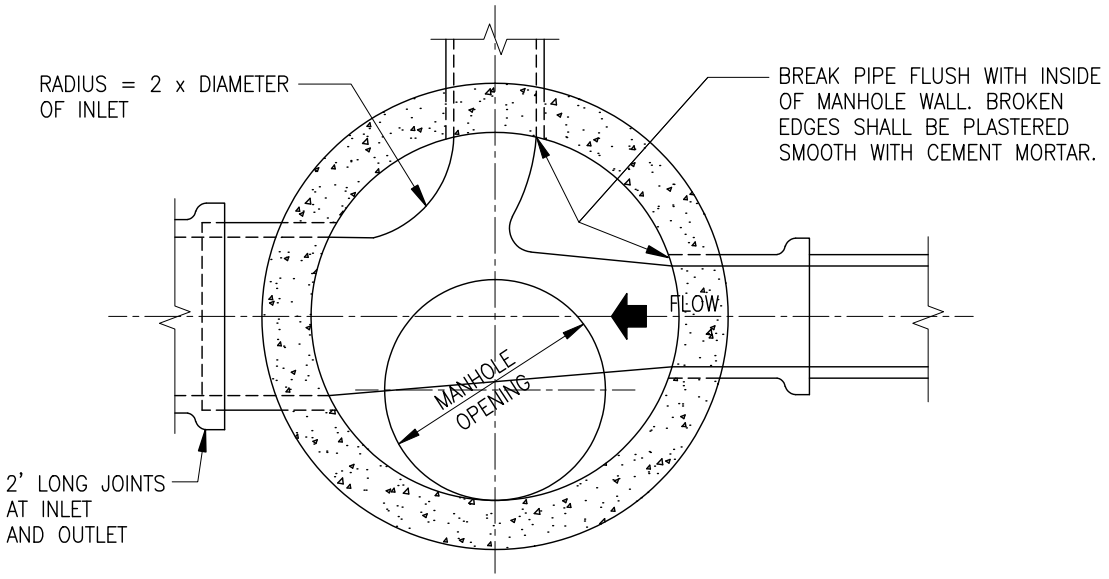

PLAN

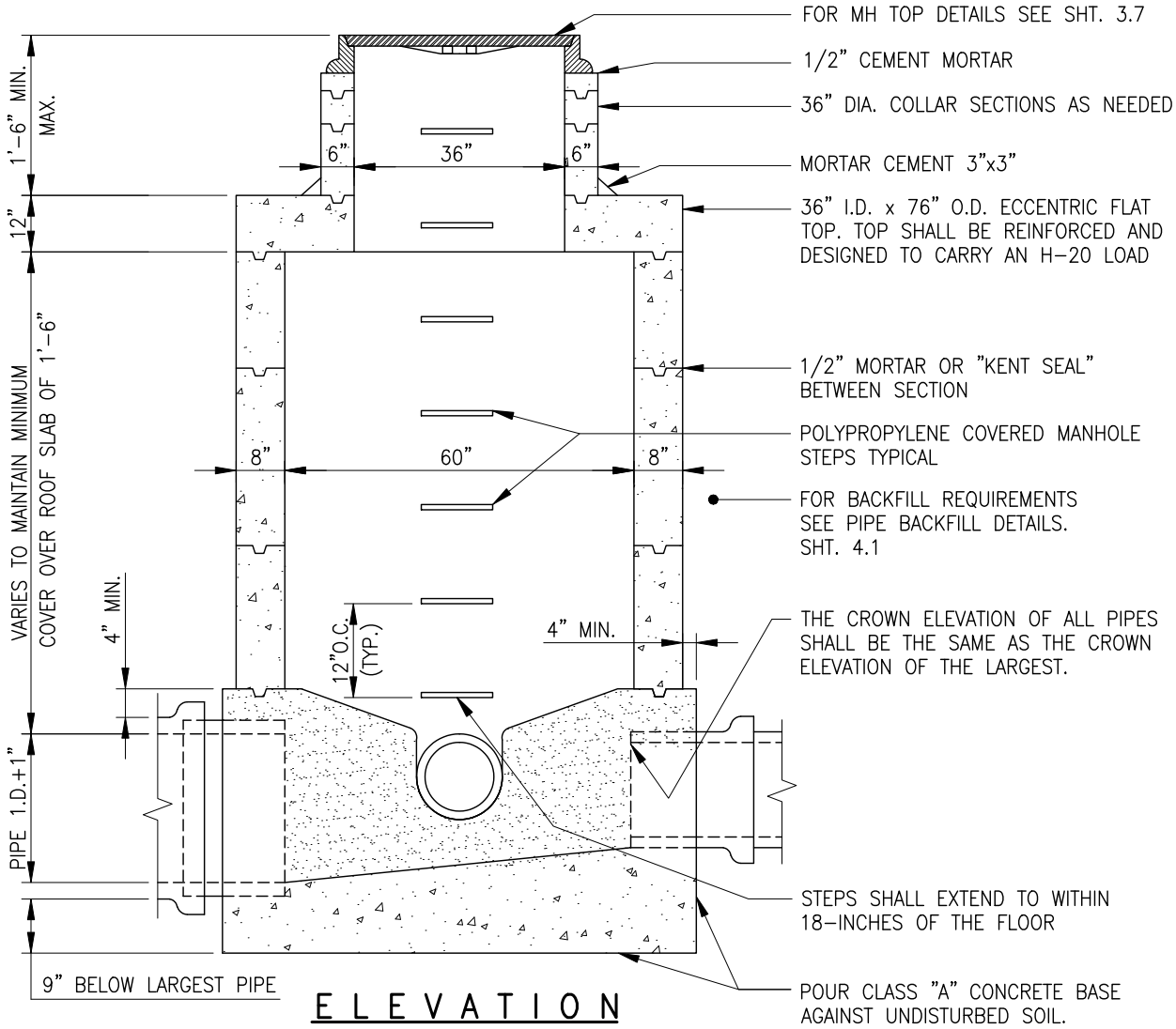

ELEVATION

		CITY OF TEHACHAPI
		60" I.D. STANDARD MANHOLE
11/07	ADDENDUM NO.1	BOYLE ENGINEERING CORPORATION — DATE DRAWN 01/06 — SHEET NO. 3.6
DATE	REVISION	

DWG: S:\T08_standard details\L1691_3-6.dwg USER: dghilarducci
DATE: Mar 03, 2008 1:42pm XREFS: BORDER

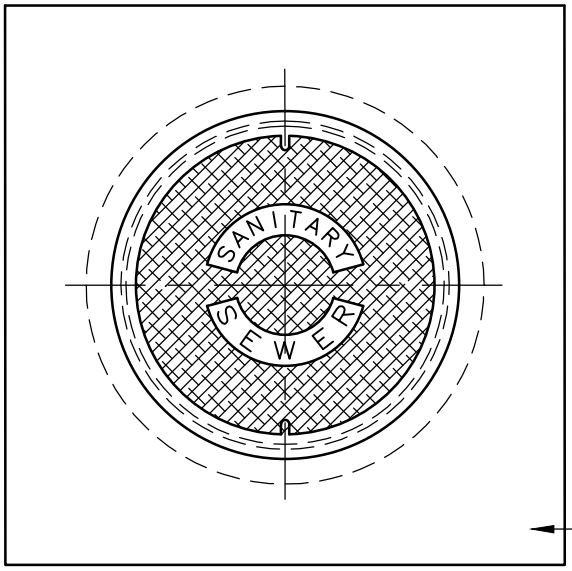

LOCKABLE MANHOLE FRAME AND COVER

NOTE: LETTERING SHALL BE 2 1/2" LETTERS.

24" DIA. – PAMREX
OR APPROVED EQUAL

36" DIA. – PAMREX
OR APPROVED EQUAL

CLASS "A" CONCRETE COLLAR

PLAN

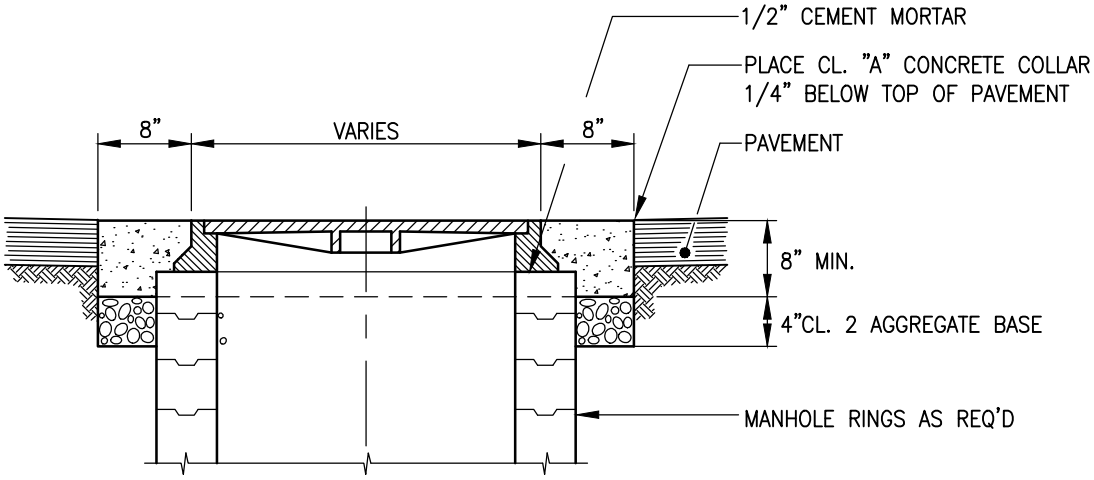

SECTION

NOTES:
SEE SECTION 3.3.5.2.C FOR MANHOLE FRAME & COVER SPECIFICATIONS.

		CITY OF TEHACHAPI
1/15	ADDENDUM NO. 2	MANHOLE FRAME AND COVER
11/07	ADDENDUM NO.1	BOYLE ENGINEERING CORPORATION — DATE DRAWN 01/06 — SHEET NO. 3.7
DATE	REVISION	

DWG: S:\T08_standard details\L1691_3_7.dwg USER: campbeliv
DATE: Dec 11, 2014 1:13pm XREFS: BORDER

NOTES:
1. REFER TO SHEETS 3.5 AND 3.6 FOR SHAPING INVERT OF MANHOLES

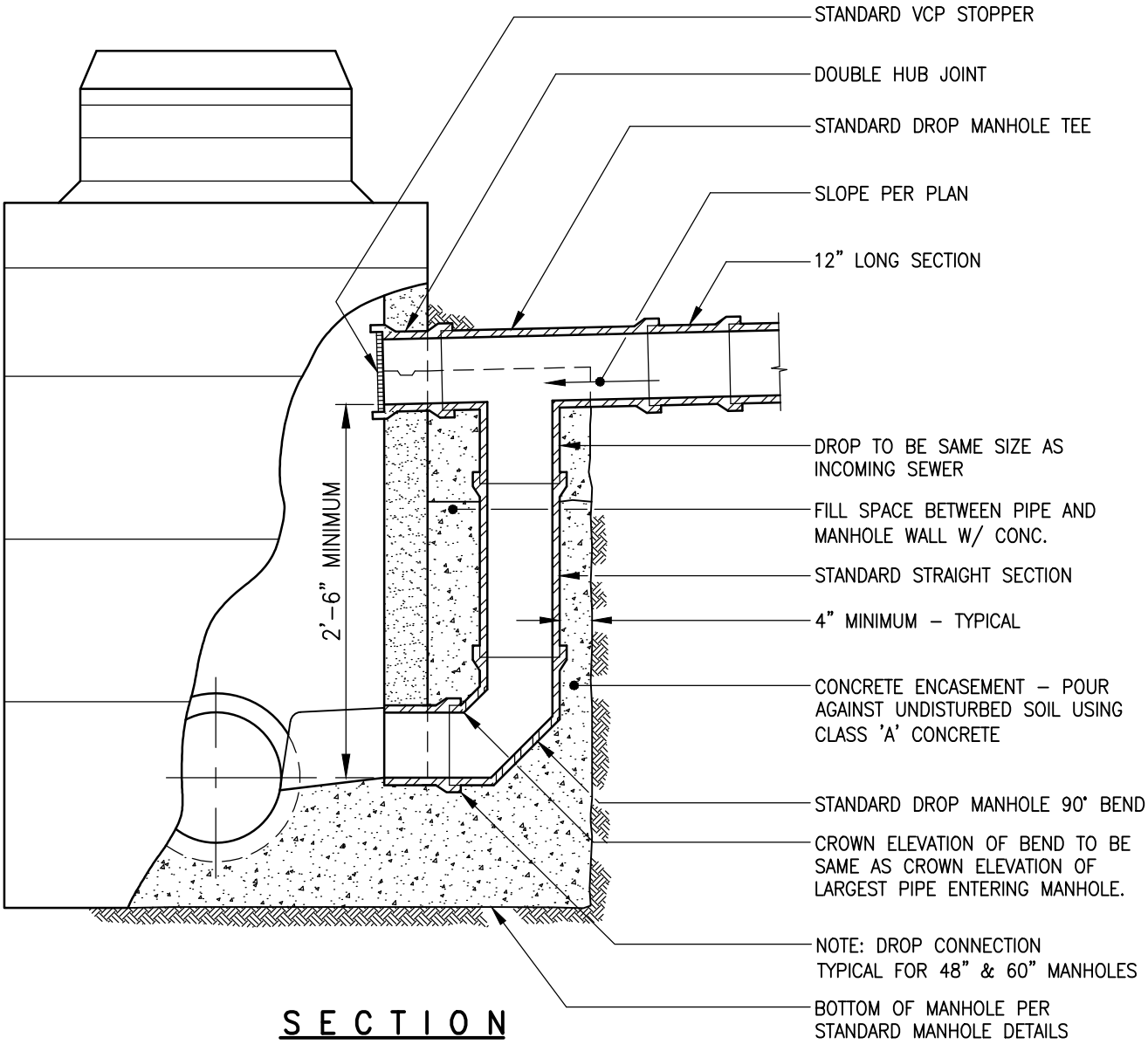

SECTION

		CITY OF TEHACHAPI		
		MANHOLE - DROP INLET		
1/15	ADDENDUM NO. 2	BOYLE ENGINEERING CORPORATION	DATE DRAWN 01/06	SHEET NO. 3.8
DATE	REVISION			

DWG: S:\T08_standard details\L1691_3-8.dwg USER: campbeliv
DATE: Dec 11, 2014 1:49pm XREFS: BORDER

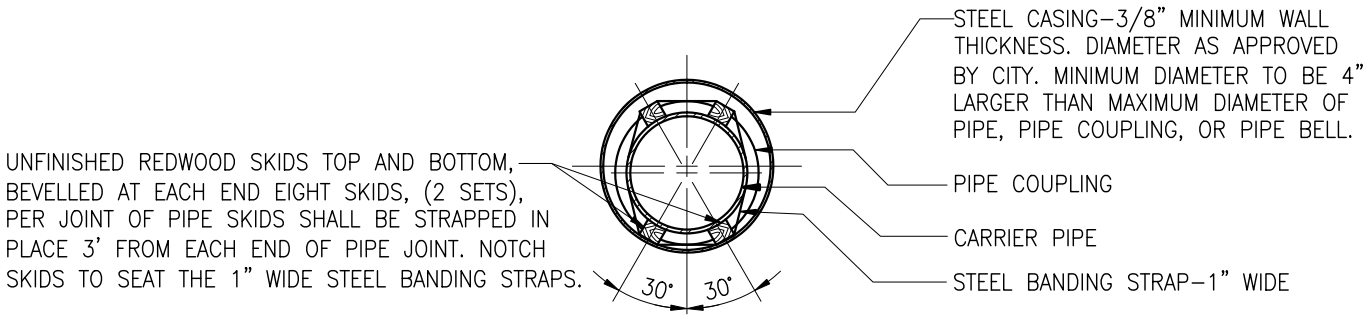

CROSS SECTION

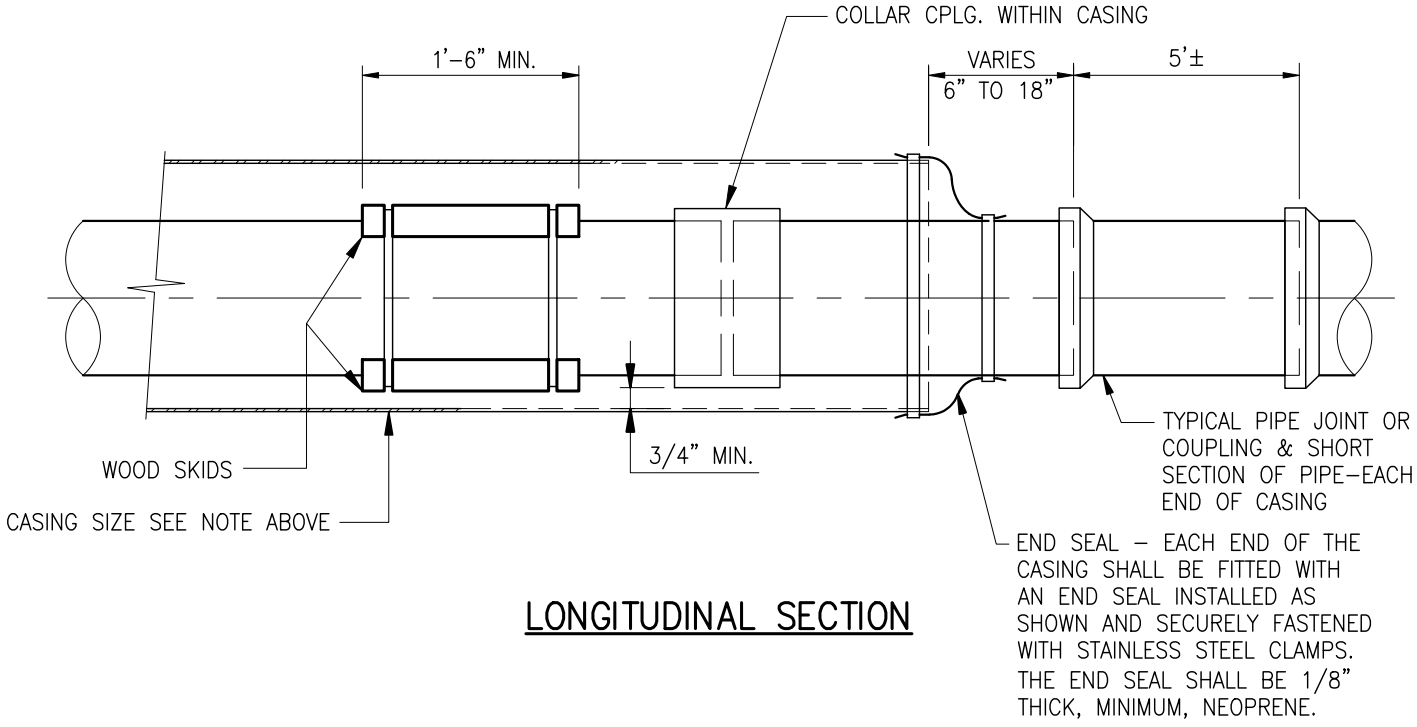

LONGITUDINAL SECTION

GENERAL NOTES:

1. CASING SHALL BE INSTALLED BY THE BORE, JACK AND/OR TUNNEL METHOD.
2. WOOD SKIDS SHALL BE PER DETAIL AND SIZED TO ALLOW INSTALLATION OF CARRIER PIPE AND PROHIBIT PIPE JOINTS FROM EXCEEDING THE PIPE MANUFACTURER'S RECOMMENDED JOINT DEFLECTION.
3. ALL CASING SECTIONS SHALL BE JOINED BY CONTINUOUS WELDING PROCESS.
4. CASING ANNULAR SPACE SHALL BE FILLED WITH SAND PER THE REQUIREMENTS OF SECTION 3.7.7.

DATE	REVISION
10/07	ADDENDUM NO.1

CITY OF TEHACHAPI

STEEL CASING FOR SEWER PIPE

BOYLE ENGINEERING CORPORATION

DATE DRAWN	SHEET NO.
10/07	3.9

DWG: S:\T08_standard details\L1691_3-9.dwg USER: dghilarducci
DATE: Mar 03, 2008 1:43pm XREFS: BORDER

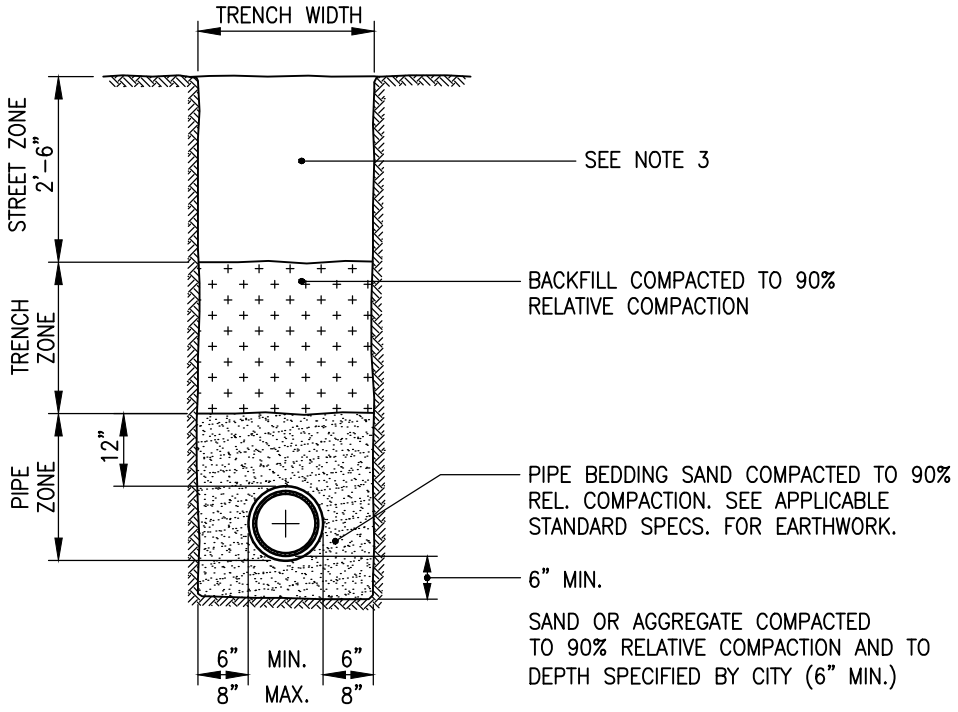

NOTES:

1. SAND AND SELECT MATERIAL SHALL BE PER APPLICABLE STANDARD SPECIFICATIONS FOR EARTHWORK.

2. SEE APPLICABLE STANDARD SPECIFICATIONS FOR EARTHWORK IF TRENCH WIDTH EXCEEDS THE MAXIMUM SHOWN ON THIS DRAWING.

3. STREET ZONE TO BE COMPACTED TO 95% RELATIVE COMPACTION IF WITHIN ROADBED OR TO 90% RELATIVE COMPACTION IF OUTSIDE OF ROADBED. SEE APPLICABLE STANDARD SPECIFICATIONS FOR EARTHWORK.

4. SEE APPLICABLE ROAD SECTION FOR PAVING REQ'MTS SHT 5.5 FOR PAVEMENT PATCH REQ'MTS IF WITHIN EXISTING ROADWAY.

5. MINIMUM COVER OVER ALL WATER DISTRIBUTION MAINS TO BE 3' AS MEASURED FROM FINISH GRADE. (5' OVER SEWER MAINS)

6. PERCENT RELATIVE COMPACTION IS THE PERCENT OF THE MAX. DRY DENSITY AS DETERMINED BY ASTM D-1557 (5 LAYER)

DATE	REVISION
1/15	ADDENDUM NO. 2

CITY OF TEHACHAPI

WATER AND SEWER PIPE
BEDDING AND BACKFILL DETAILS

BOYLE ENGINEERING CORPORATION

DATE DRAWN	SHEET NO.
01/06	4.1

DWG: S:\T08_standard details\L1691_4-1.dwg USER: campbellv
DATE: Jan 07, 2015 10:18am XREFS: BORDER

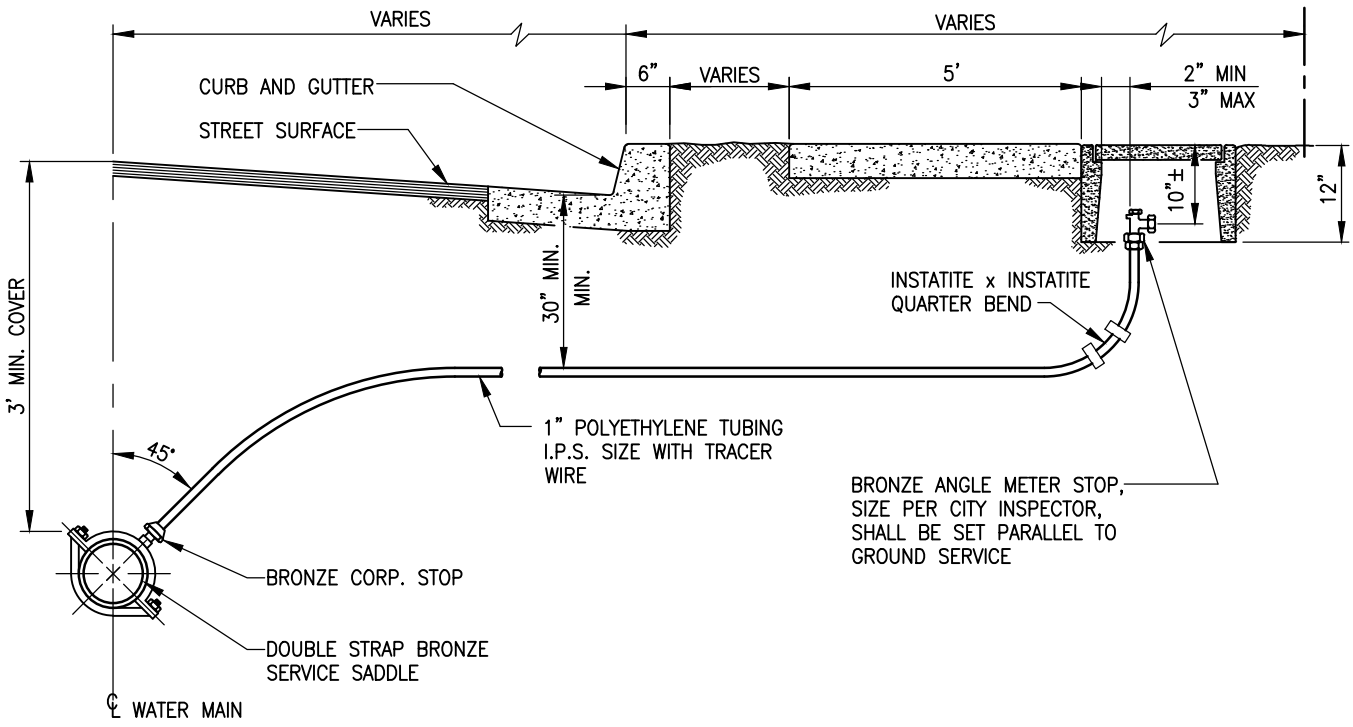

SECTION

NOTES:

1. SIZE OF SERVICES MUST BE APPROVED BY THE CITY.
2. THE WATER SERVICE SHALL EXTEND PERPENDICULAR TO THE CENTERLINE OF THE STREET FROM THE WATER MAIN TO THE METER STOP.
3. METER BOXES SHALL BE CONSTRUCTED IMMEDIATELY BEHIND THE SIDEWALK WHERE SIDEWALKS ARE ADJACENT TO CURBS.
4. IF METER BOX IS LOCATED ON A SLOPE NEXT TO A CURB, OR SIDEWALK, A PROTECTIVE RETAINING WALL SHALL BE CONSTRUCTED.
5. CORPORATION STOP TAP SHALL BE MADE AS SPECIFIED BY THE PIPE MANUFACTURER'S INSTALLATION GUIDE. ALL DRY TAPS SHALL BE MADE WITH MACHINE WITH GUIDE OR PILOT WITH TAP.
6. METER BOXES TO BE BROOKS, OR EQUAL, AS SPECIFIED BELOW:
   1" CHRISTY B30
   1 1/2" & 2" CHRISTY B36
7. ALL FITTING VALVES SHALL CONFORM TO AWWA C900.
8. CONNECTIONS TO PE TUBING SHALL USE MUELLER INSTA-TITE COMPONENTS (1" METER) AND COMPRESSION FITTINGS FOR SIZE ABOVE 1"
9. POLYETHYLENE (PE) TUBING SHALL CONFORM TO AWWA C900, APPENDIX A, ASST. D2737 TYPE III, GRADE P34, PRESSURE CLASS 200 PSI.
10. SET ALL METERS BEHIND WALK.
11. ALL SERVICES TO HAVE DETECTABLE TRACER WIRE

		CITY OF TEHACHAPI
		1" 1-1/2" & 2" STANDARD WATER SERVICES
1/15	ADDENDUM NO. 2	BOYLE ENGINEERING CORPORATION — DATE DRAWN 01/06 — SHEET NO. 4.2
DATE	REVISION	

DWG: S:\T08_standard details\L1691_4-2.dwg USER: campbellv
DATE: Dec 11, 2014 1:50pm XREFS: BORDER

DWG: S:\T08_standard details\L1691_4-3.dwg USER: campbellv
DATE: Dec 11, 2014 1:51pm XREFS: BORDER

DATE	REVISION
1/15	ADDENDUM NO. 2

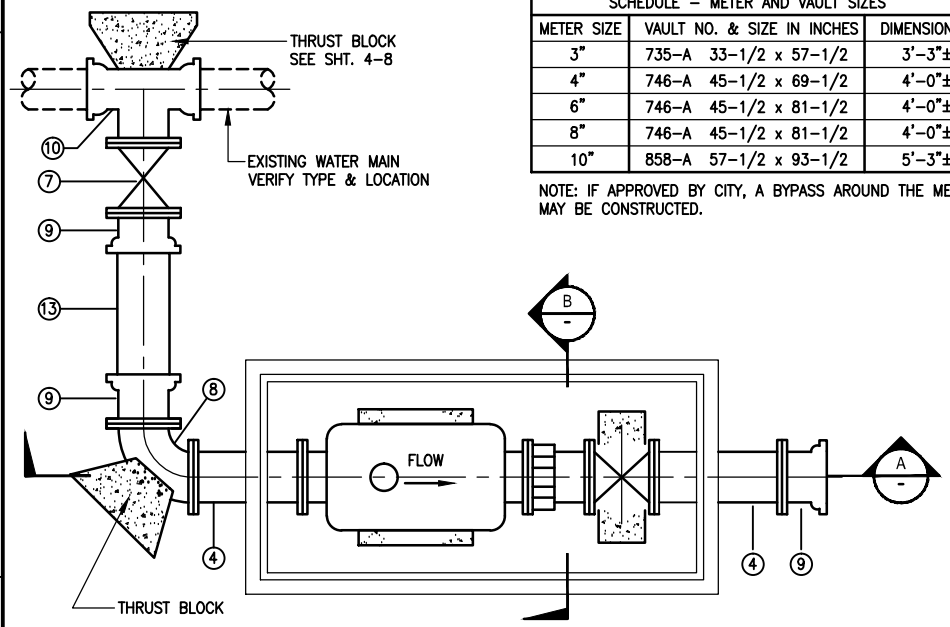

PLAN 1

(4'-10" SERVICE SHOWN)

SCHEDULE – METER AND VAULT SIZES		
METER SIZE	VAULT NO. & SIZE IN INCHES	DIMENSION A
3"	735-A 33-1/2 x 57-1/2	3'-3"±
4"	746-A 45-1/2 x 69-1/2	4'-0"±
6"	746-A 45-1/2 x 81-1/2	4'-0"±
8"	746-A 45-1/2 x 81-1/2	4'-0"±
10"	858-A 57-1/2 x 93-1/2	5'-3"±

NOTE: IF APPROVED BY CITY, A BYPASS AROUND THE METER MAY BE CONSTRUCTED.

ITEMS	DISCRIPTIONS OF MATERIALS
1	COMPOUND SERIES WATER METER, RADIO READ IN GPM.
2	FLANGED COUPLING ADAPTER
3	STANDARD WEIGHT STEEL PIPE-FLGxPE-12" LONG MINIMUM.
4	STANDARD WEIGHT STEEL PIPE-FLGxFLG. & FLGxBLIND FLG. LENGTH = 5 PIPE DIAMETERS MINIMUM.
5	PRECAST CONCRETE VAULT GALVANIZED COVER WITH 7"x14" READING LID-BROOKS PRODUCTS OR APPROVED EQUAL.
6	GATE VALVE-FLANGED
7	GATE VALVE-FLGxFLG WITH VALVE BOX
8	STANDARD WEIGHT STEEL 90° BEND-FLGxFLG.
9	ADAPTER-FLGxMJ
10	CAST IRON TEE WITH FLANGED OUTLET
11	CLASS 'A' CONCRETE SUPPORTS.
12	CLASS II AGGREGATE BASE-12 MINIMUM THICKNESS
13	AWWA C900 PVC PIPE FOR 4" THRU 10" DIA. USE SCHEDULE 40 FLANGED STEEL PIPE FOR 3" SERVICE.
	NOTE: ALL STEEL PIPE SHALL BE FUSION EPOXY LINED AND COATED-100% SOLID THERMOSETTING, APPLIED BY FLUIDIZED BE METHOD.
14	ADJUSTABLE PIPE SUPPORT

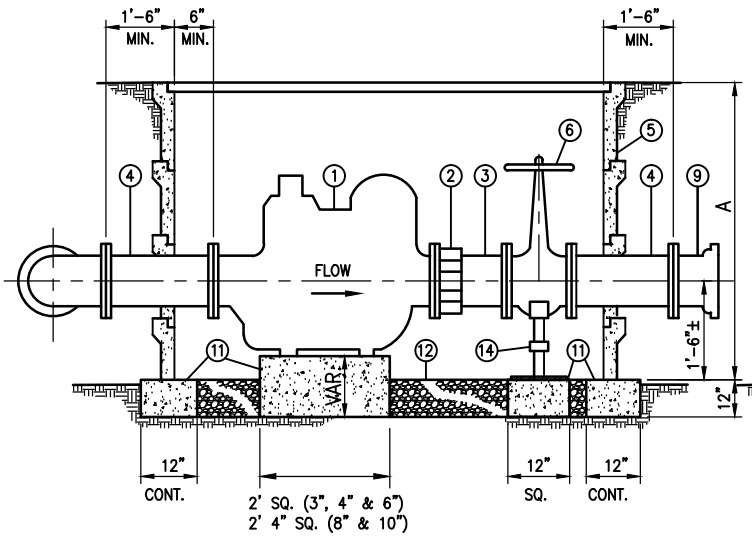

SECTION A

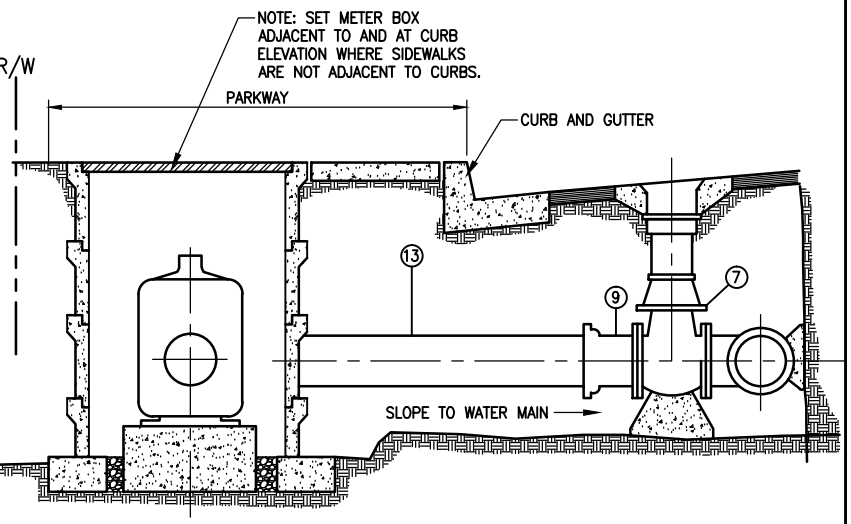

SECTION B

3", 4", 6", 8", & 10" WATER SERVICE

CITY OF TEHACHAPI

STANDARD WATER METER

BOYLE ENGINEERING CORPORATION

DATE DRAWN 01/06

SHEET NO. 4.3

NOTES:

1.) HYDRANTS ARE TO BE LOCATED BEHIND CURB LINE AS FOLLOWS:

a. WHEN SIDEWALK IS NOT ADJACENT TO CURB, HYDRANT SHALL BE 2'-6" MIN. BEHIND CURB LINE.

b. WHEN SIDEWALK IS ADJACENT TO CURB, HYDRANT SHALL BE 5'-10" BEHIND CURB LINE.

c. WHERE NO CURB, GUTTER & SIDEWALK EXIST, HYDRANTS ARE TO BE PLACED 2'-2" FROM PROPERTY LINE.

d. ON STREET INTERSECTIONS HYDRANTS SHALL NOT BE PLACED WITHIN 3' OF BCR OR ECR.

e. CURB TO BE PAINTED RED FOR 5-FEET TO EITHER SIDE OF HYDRANT.

f. INSTALL RECESSED BLUE RETRO REFLECTIVE PAVEMENT MARKER 1-FOOT FROM ℄ OF STREET TO HYDRANT SIDE.

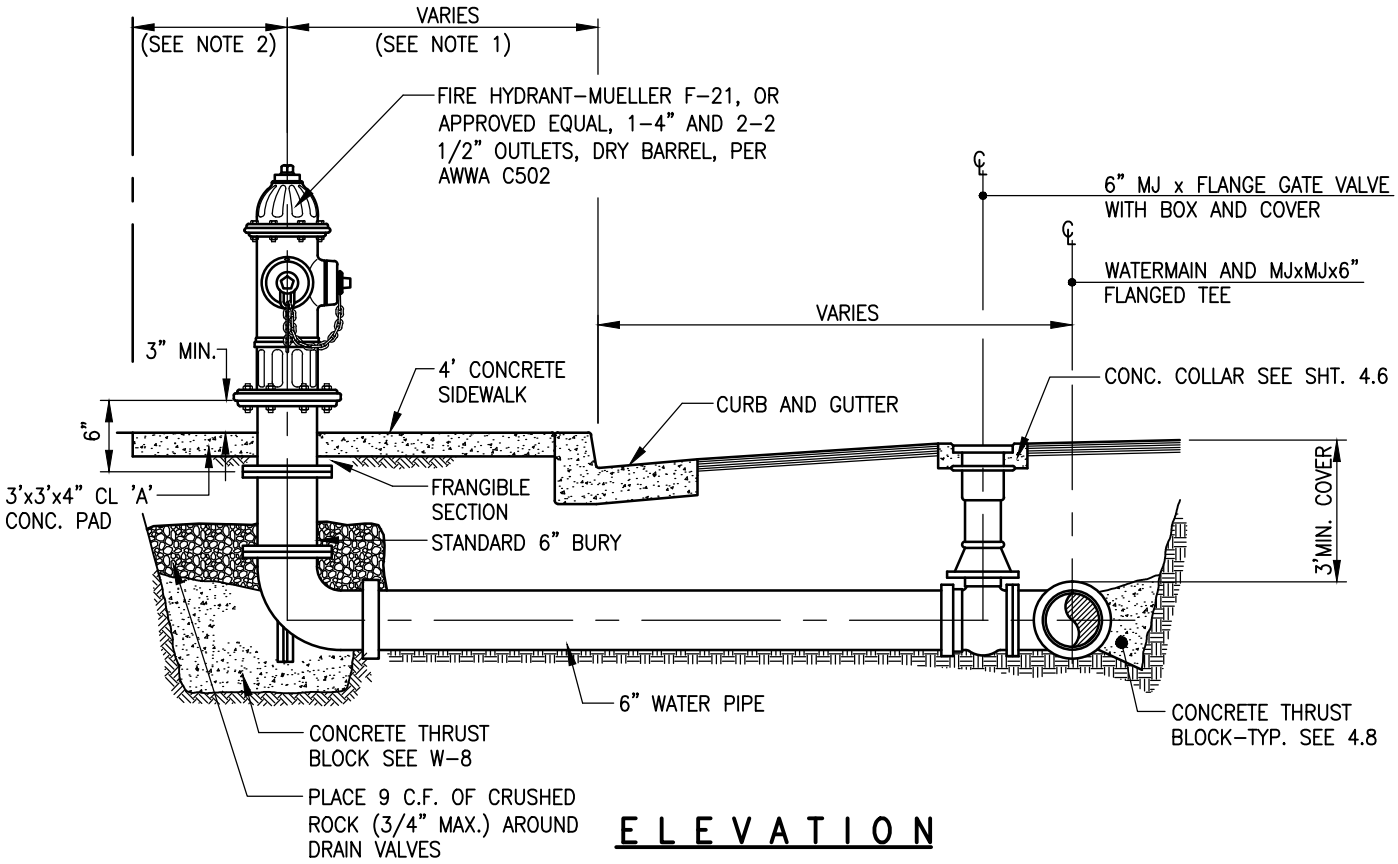

ELEVATION

		CITY OF TEHACHAPI
		STANDARD FIRE HYDRANT ASSEMBLY
1/15	ADDENDUM NO. 2	
11/07	ADDENDUM NO.1	BOYLE ENGINEERING CORPORATION — DATE DRAWN 01/06 — SHEET NO. 4.4
DATE	REVISION	

DWG: S:\T08_standard details\L1691_4-4.dwg USER: campbeliv
DATE: Dec 11, 2014 1:14pm XREFS: BORDER

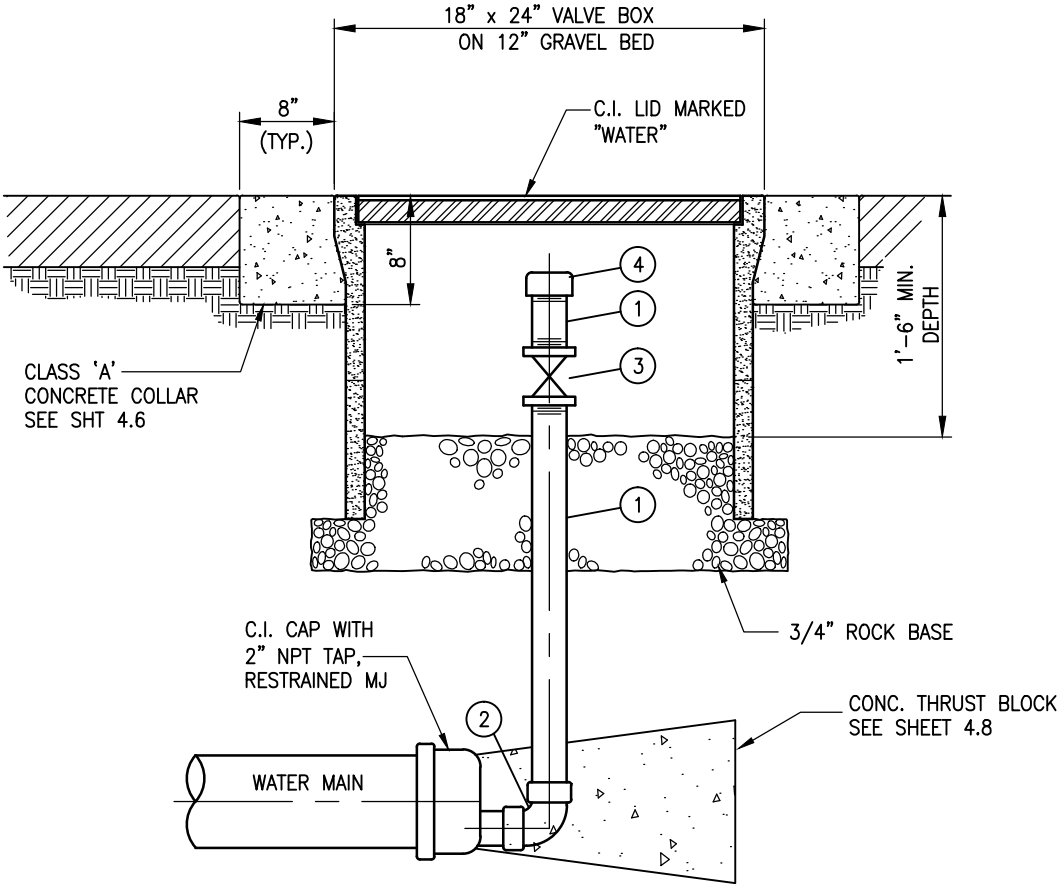

MATERIAL LIST:

1. SCH. 40 BRASS PIPE
2. SCH. 40 BRASS ELBOW
3. BRONZE BALL VALVE
4. THREADED PVC CAP

WATER MAIN SIZE (IN)	WATER BLOW-OFF SIZE (IN)
8	2
10	2
12	3
14	3
16	3
>16	4

DATE	REVISION
1/15	ADDENDUM NO. 2
10/07	ADDENDUM NO.1

CITY OF TEHACHAPI

BLOWOFF ASSEMBLY

BOYLE ENGINEERING CORPORATION

DATE DRAWN	SHEET NO.
01/06	4.5

DWG: S:\T08_standard details\L1691_4-5.dwg USER: campbeliv
DATE: Dec 11, 2014 1:15pm XREFS: BORDER

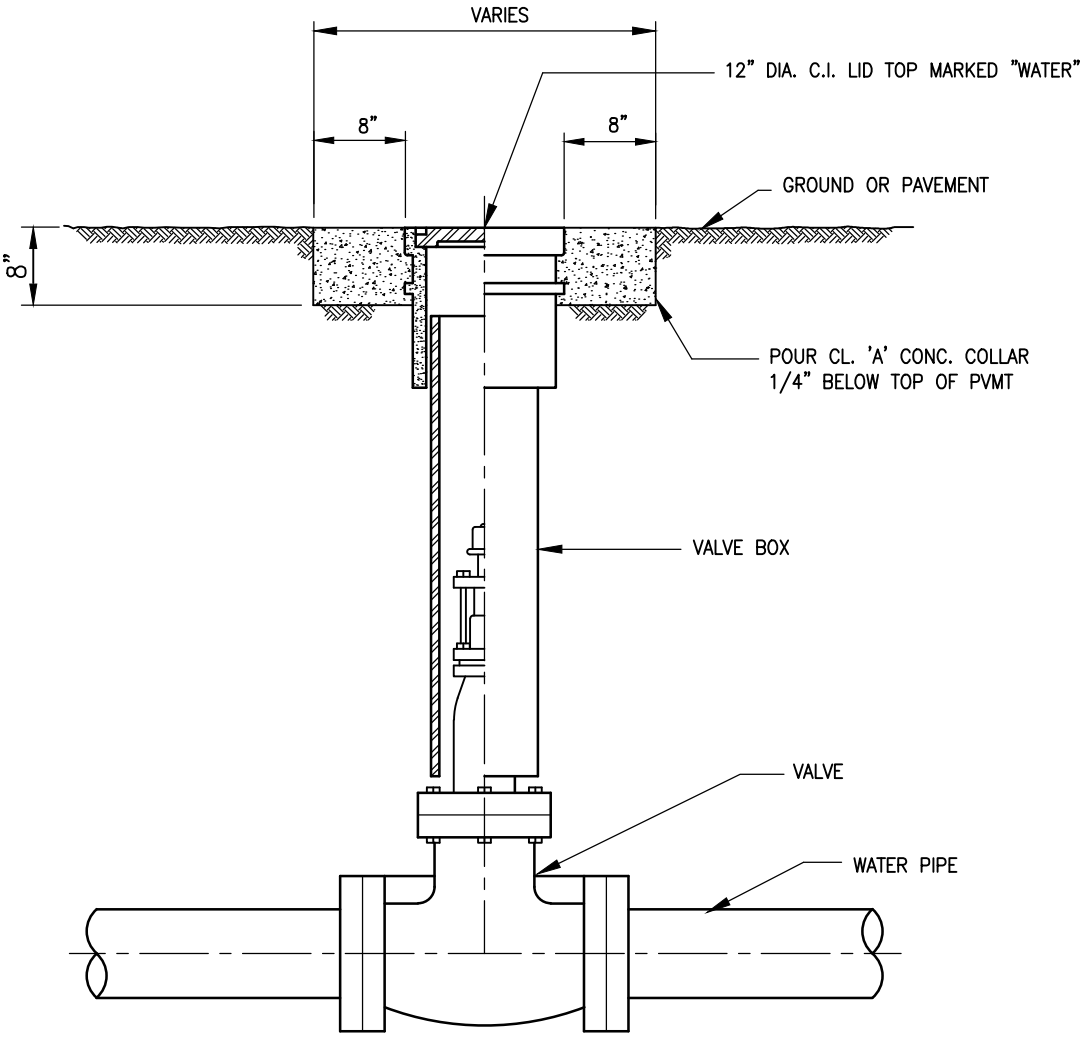

SECTION – ELEVATION

		CITY OF TEHACHAPI		
		VALVE BOX ASSEMBLY		
1/15	ADDENDUM NO. 2	BOYLE ENGINEERING CORPORATION	DATE DRAWN 01/06	SHEET NO. 4.6
DATE	REVISION			

DWG: S:\T08_standard details\L1691_4-6.dwg USER: campbellv
DATE: Dec 17, 2014 7:47am XREFS: BORDER

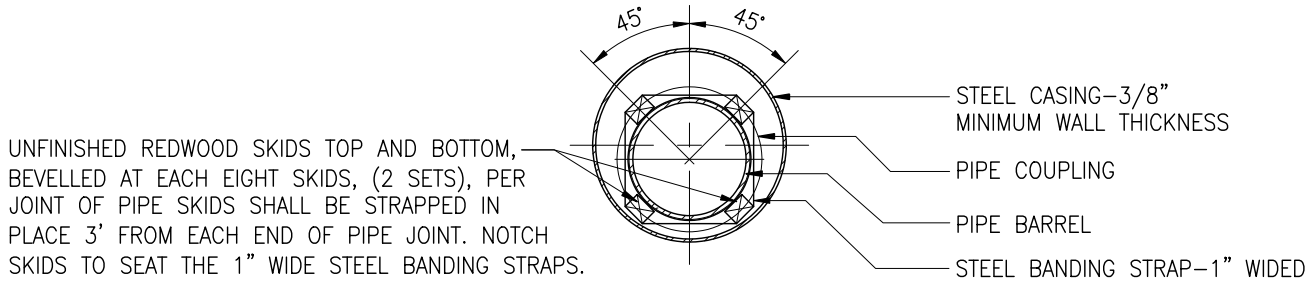

CROSS SECTION

PIPE CASING TABLE

SCHEDULE – STEEL CASING FOR PIPE	
NOMINAL PIPE DIAMETER	MINIMUM CASING DIAMETER
6"	12" I.D.
8"	16" I.D.
10"	18" I.D.
12"	20" I.D.

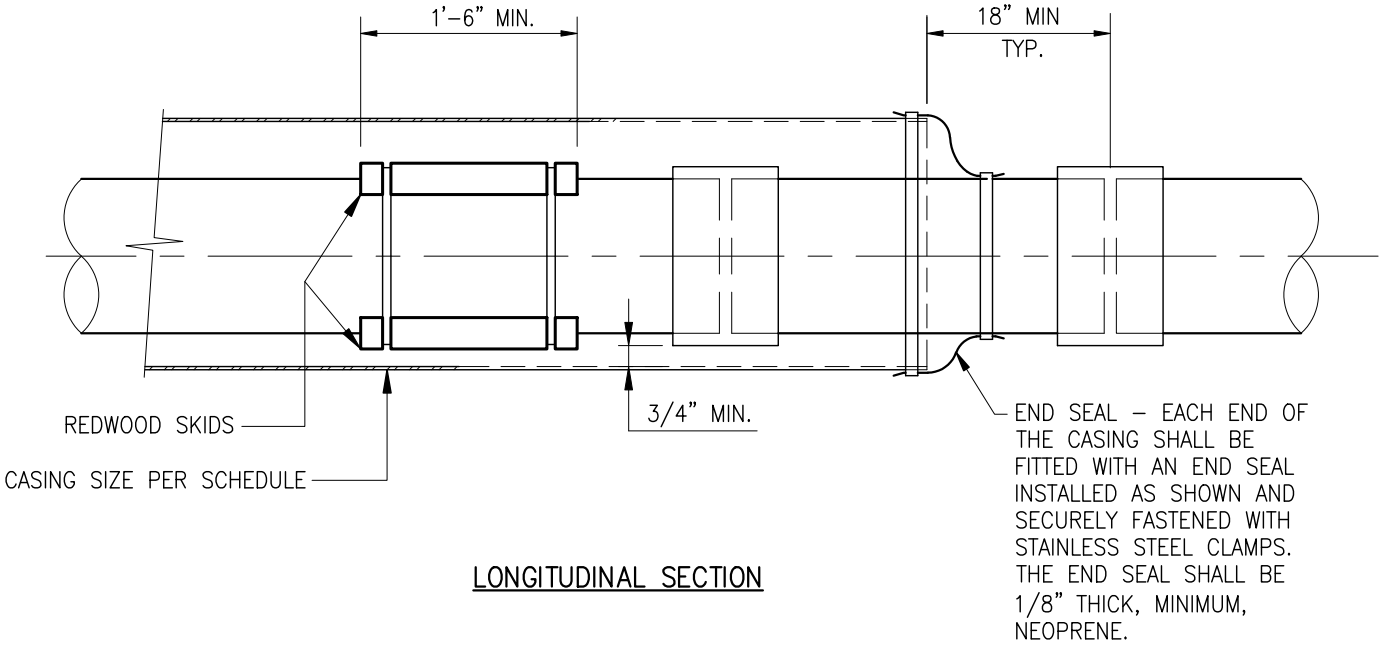

LONGITUDINAL SECTION

GENERAL NOTES:

1. CASING SHALL BE INSTALLED BY THE BORE, JACK AND/OR TUNNEL METHOD.
2. REDWOOD SKIDS SHALL BE PER DETAIL AND SIZED TO ALLOW INSTALLATION OF CARRIER PIPE AND PROHIBIT PIPE JOINTS FROM EXCEEDING THE PIPE MANUFACTURER'S RECOMMENDED JOINT DEFLECTION.
3. ALL CASING SECTIONS SHALL BE JOINED BY CONTINUOUS WELDING PROCESS.
4. CASING ANNULAR SPACE SHALL BE FILLED WITH SAND PER THE REQUIREMENTS OF SECTION 3.7.7.

DATE	REVISION
10/07	ADDENDUM NO.1

CITY OF TEHACHAPI

STEEL CASING FOR WATER PIPE

BOYLE ENGINEERING CORPORATION

DATE DRAWN	SHEET NO.
01/06	4.7

DWG: S:\T08_standard details\L1691_4-7.dwg USER: dghilarducci
DATE: Mar 03, 2008 1:46pm XREFS: BORDER

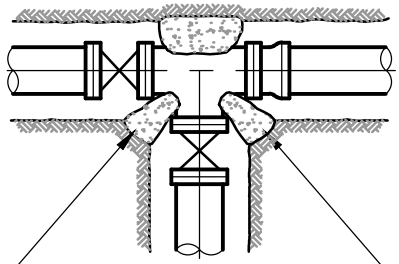

CONDITION 1
(OUTLET OR FIRE HYDRANT)

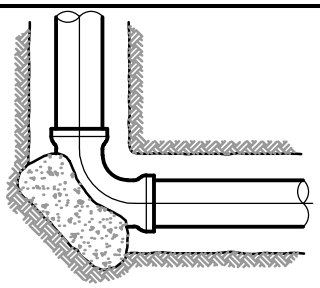

CONDITION 2
(ANGLE = 90°)

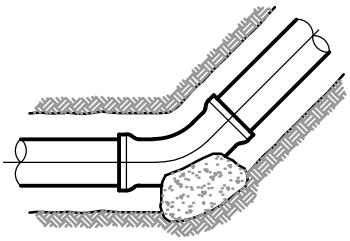

CONDITION 3
(ANGLE = 45°)

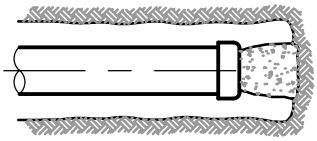

CONDITION 4
(END CAP)

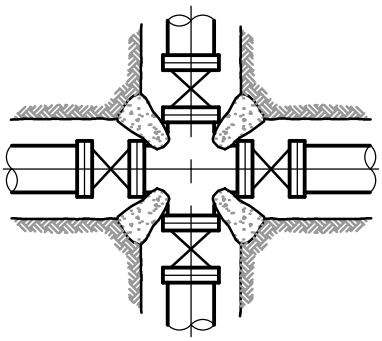

CONDITION 5
(MAINLINE CROSS)

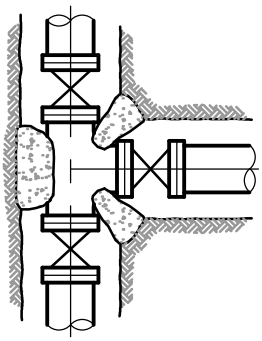

CONDITION 6
(MAINLINE TEE)

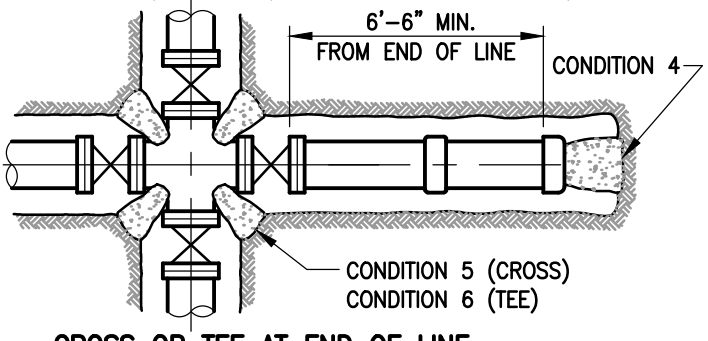

CROSS OR TEE AT END OF LINE

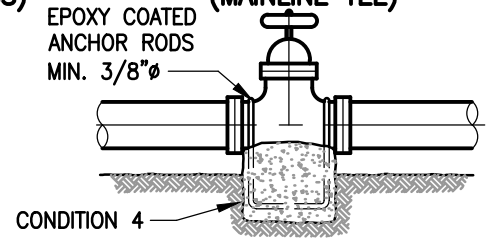

ANCHOR FOR IN LINE 12" VALVES OR LARGER

THRUST BLOCK BEARING AREA IN SQ. FT.						
PIPE SIZE	CONDITION					
	1	2	3	4	5	6
6"	3.8	6.4	3.7	3.8	2.0 EACH	3.2 EACH
8"	6.7	11.4	6.5	6.7	3.5 EACH	5.7 EACH
10"	10.5	17.8	10.2	10.5	5.5 EACH	8.9 EACH
12"	15.1	25.7	14.7	15.1	7.9 EACH	12.8 EACH
14"	20.5	34.9	20.0	20.5	10.8 EACH	17.5 EACH
16"	26.8	45.6	26.1	26.8	14.1 EACH	22.8 EACH

BASED ON 1500 P.S.F. SOIL BEARING PRESSURE, 200 P.S.I. TEST PRESSURE

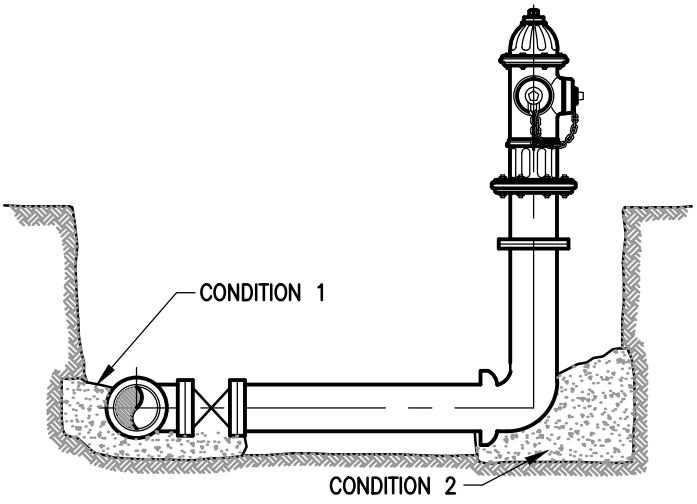

FIRE HYDRANT

NOTES:

1. SIZE THRUST BLOCK ACCORDING TO THE LARGEST OUTLET DIAMETER ON TEE OR CROSS.
2. ALL THRUST BLOCK BEARING FACES SHALL BE POURED AGAINST UNDISTURBED SOIL OR APPROVED COMPACTED MATERIAL.
3. THRUST BLOCK CONCRETE SHALL BE CLASS B PER THE APPLICABLE STANDARD SPECIFICATIONS FOR CONCRETE.

DATE	REVISION
1/15	ADDENDUM NO. 2

CITY OF TEHACHAPI

TYPICAL THRUST BLOCK DETAILS

BOYLE ENGINEERING CORPORATION

DATE DRAWN	SHEET NO.
01/06	4.8

DWG: S:\T08_standard details\L1691_4-8.dwg USER: campbeliv
DATE: Dec 12, 2014 7:31am XREFS: BORDER

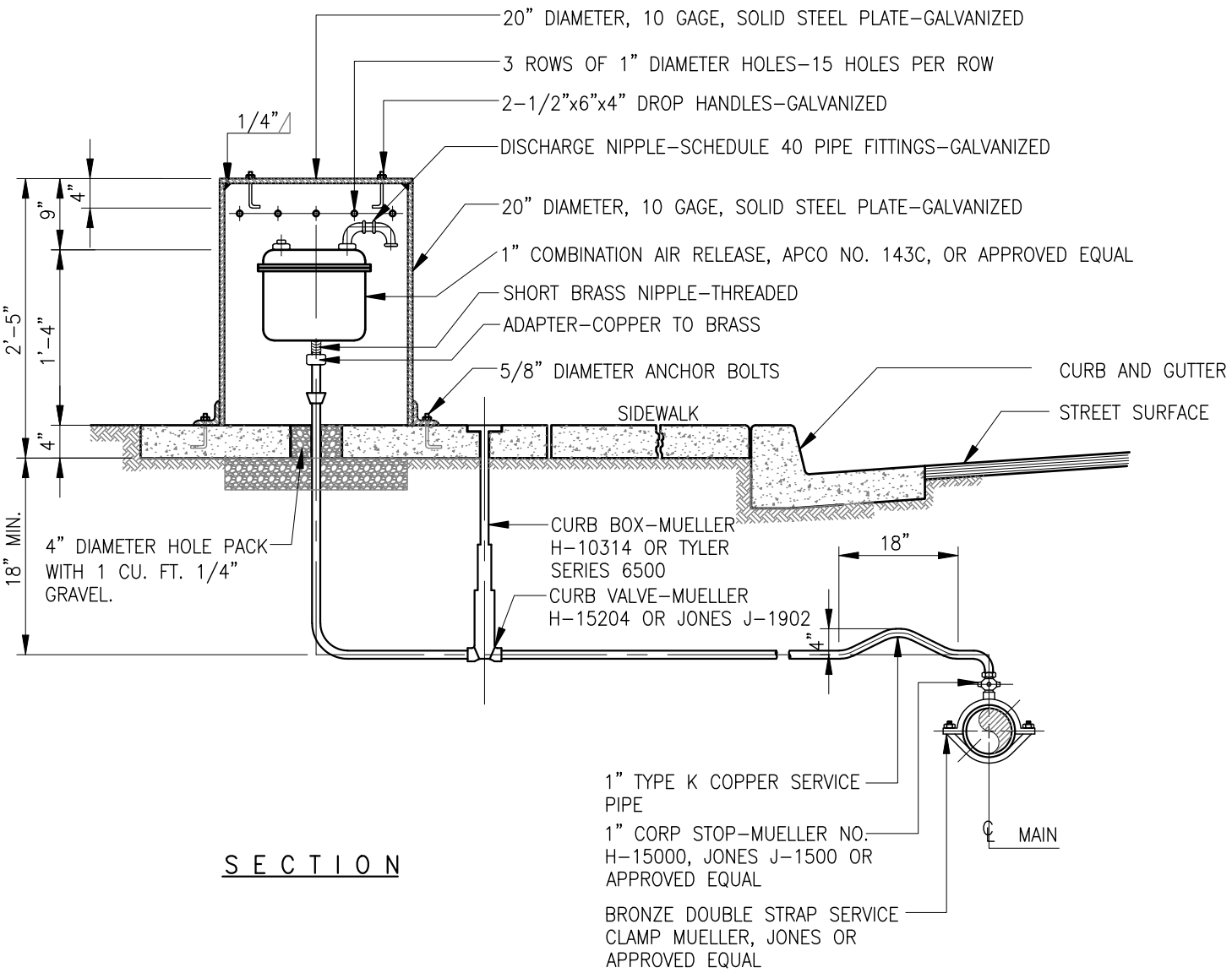

SECTION

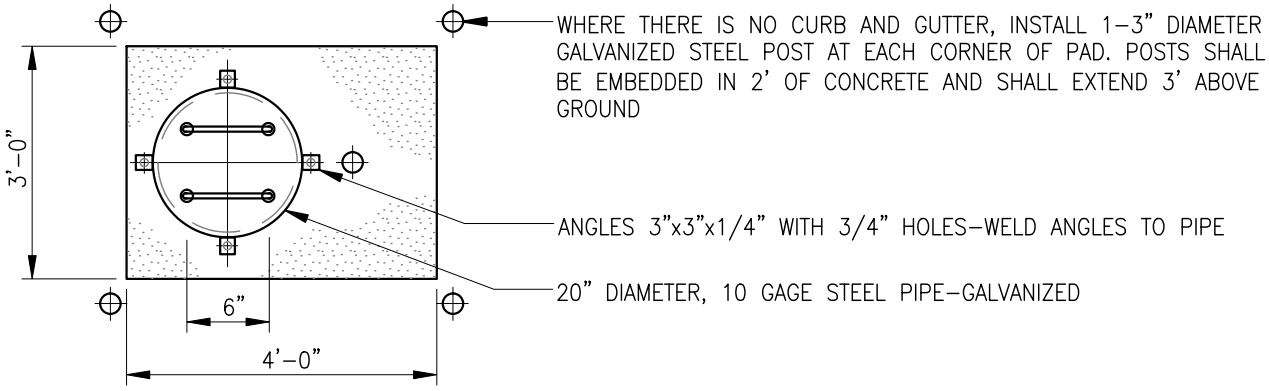

PLAN

		CITY OF TEHACHAPI		
		COMBINATION AIR RELEASE VALVE ASSEMBLY		
10/07	ADDENDUM NO.1	BOYLE ENGINEERING CORPORATION	DATE DRAWN 04/02	SHEET NO. 4.9
DATE	REVISION			

DWG: S:\T08_standard details\L1691_4-9.dwg USER: dghilarducci
DATE: Mar 03, 2008 1:46pm XREFS: BORDER

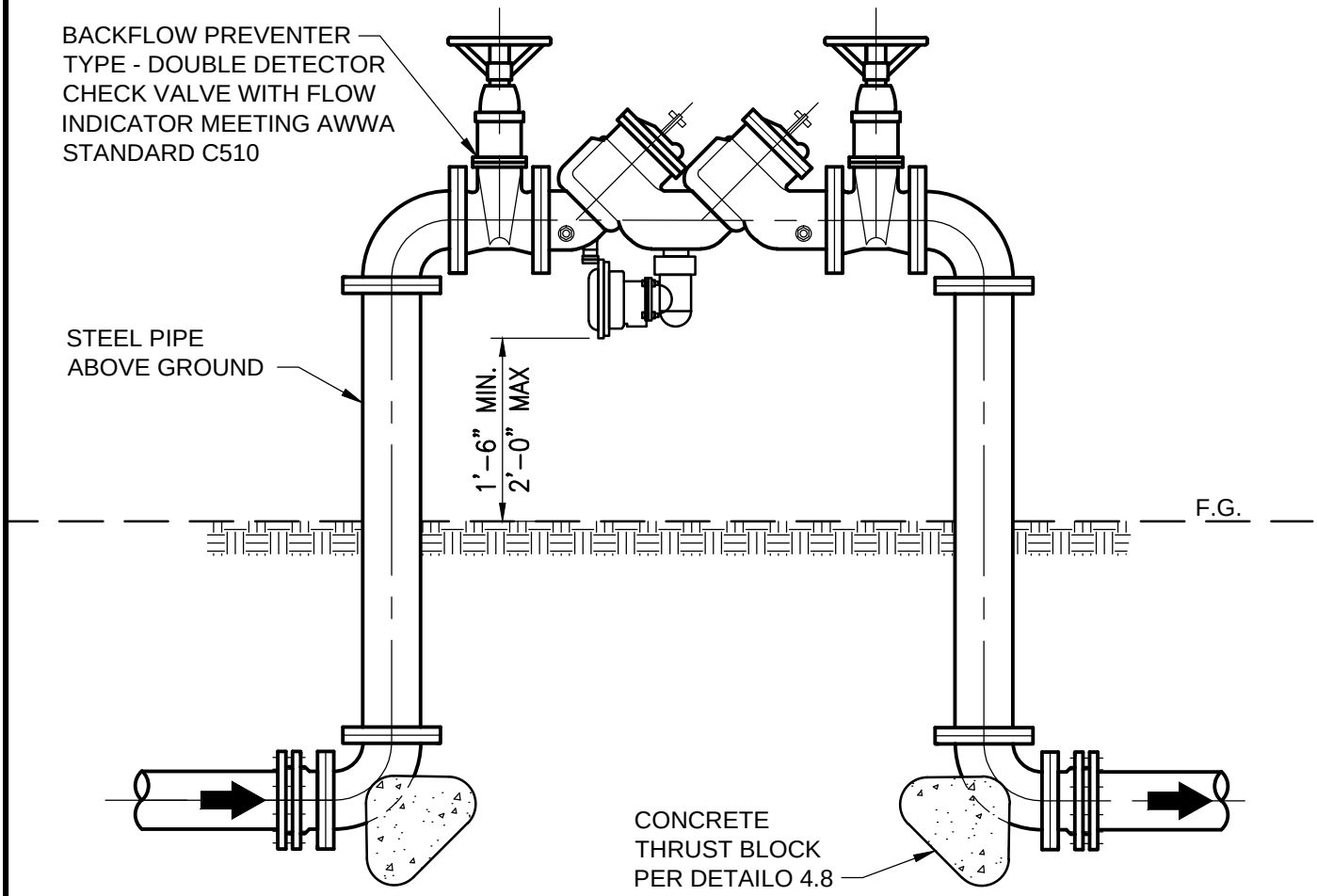

GENERAL NOTES:

1. MAKE AND MODEL OF BACKFLOW PREVENTER SHALL BE APPROVED BY CITY PRIOR TO INSTALLATION.

2. BACKFLOW PREVENTER MUST BE INSTALLED PARALLEL TO ROADWAY OUTSIDE CITY RIGHT-OF-WAY DIRECTLY DOWNSTREAM FROM THE POINT OF CONNECTION AND/OR THE WATER METER UNLESS ALLOWED OTHERWISE BY THE CITY ENGINEER.

3. BACKFLOW PREVENTER MAY BE INSTALLED WITHIN A PROTECTIVE ENCLOSURE AT THE OPTION OF THE OWNER.

4. BACKFLOW PREVENTERS SHALL BE INSTALLED AND TESTED IN PLACE BY APPROVED TESTER PRIOR TO BEING PLACED INTO PERMANENT OPERATION.

5. APPROPRIATE MEASURES SHALL BE TAKEN TO PROTECT BACKFLOW PREVENTION DEVICE AND ABOVE GROUND PIPING AGAINST FROST WITH AN INSULATED BLANKET AS APPROVED BY THE CITY ENGINEER.

DATE	REVISION
1/15	ADDENDUM NO. 2
10/07	ADDENDUM NO.1

CITY OF TEHACHAPI

BACKFLOW PREVENTER
FOR FIRE LINE PROTECTION

BOYLE ENGINEERING CORPORATION

DATE DRAWN	SHEET NO.
01/06	4.10

DWG: S:\T08_standard details\L1691_4-10.dwg USER: campbellv
DATE: Jan 07, 2015 10:21am XREFS: BORDER

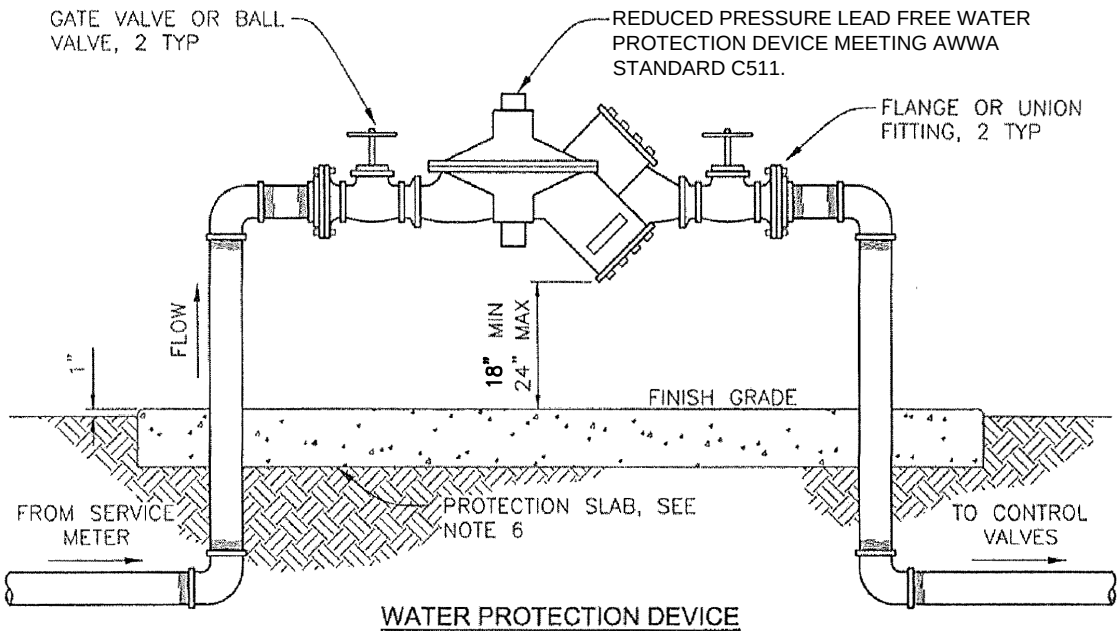

WATER PROTECTION DEVICE
(REDUCED PRESSURE PRINCIPAL TYPE SHOWN)

GENERAL NOTES:

1. ANY AND ALL CHANGES FROM THIS STANDARD DETAIL SHEET SHALL BE APPROVED BY THE CITY ENGINEER PRIOR TO CONSTRUCTION.
2. USE TEFLON PIPE TAPE ON ALL THREADED JOINTS OR APPROVED EQUAL BY THE CITY ENGINEER.
3. ALL MATERIALS USED SHALL BE NEW AND FREE FROM DEFECTS.
4. SEE APPROVED LANDSCAPE AND IRRIGATION PLANS FOR SPECIFIC MODEL NO., SIZE, QUANTITY, MANUFACTURER, AND PERFORMANCE OF THE VARIOUS ITEMS.
5. ALL TRANSITIONS FROM METAL PIPE TO P.V.C. PIPE SHALL BE CONSTRUCTED WITH SCH. 80 FEMALE ADAPTER OR APPROVED EQUAL BY THE CITY ENGINEER.
6. A 6" THICK CLASS "B" CONCRETE SLAB IS REQUIRED FOR ALL WATER PROTECTION DEVICES INSTALLED IN LAWN AREAS. MINIMUM CLEARANCE SHALL BE 18" ON ALL SIDES OF THE DEVICE OR ITS ENCLOSURE AND AS DIRECTED BY THE CITY ENGINEER.
7. ALL IRRIGATION INSTALLATIONS SHALL BE IN ACCORDANCE WITH CITY STANDARDS, THE LATEST EDITION OF THE UNIFORM PLUMBING CODE, MANUFACTURER'S RECOMMENDATION, SECTION 20 OF THE STANDARD SPECIFICATIONS, AND AS DIRECTED BY THE CITY ENGINEER.

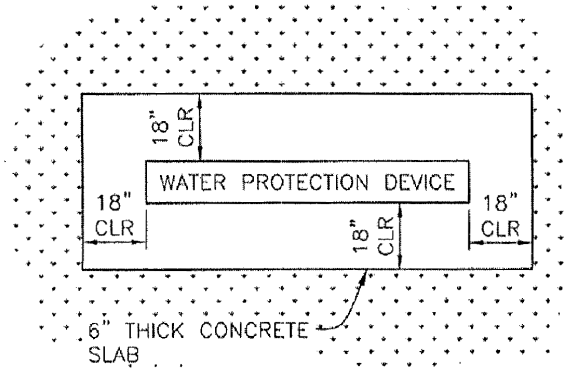

PROTECTION SLAB

8. ALL PIPING AND FITTINGS ABOVE GROUND SHALL BE GALVANIZED SCHED. 40, UNLESS NOTED OTHERWISE.
9. BACKFLOW PREVENTERS SHALL BE INSTALLED & TESTED IN PLACE BY APPROVED TESTER PRIOR TO BEING PLACED INTO PERMANENT OPERATION.
10. PROVIDE BACKFLOW PREVENTION DEVICE WITH A VANDAL & WEATHER RESISTANT ENCLOSURE. ENCLOSURE SHALL BE AS DESCRIBED IN THE STANDARD SPECIFICATIONS OR AS APPROVED BY THE CITY ENGINEER.

DATE	REVISION
1/15	ADDENDUM NO. 2
11/07	ADDENDUM NO.1

CITY OF TEHACHAPI

WATER PROTECTION DEVICE
(BACKFLOW PREVENTION)
FOR IRRIGATION AND POTABLE SERVICE

BOYLE ENGINEERING CORPORATION

DATE DRAWN	SHEET NO.
01/06	4.11

DWG: S:\T08_standard details\L1691_411.dwg USER: campbellv
DATE: Jan 07, 2015 10:22am XREFS: BORDER

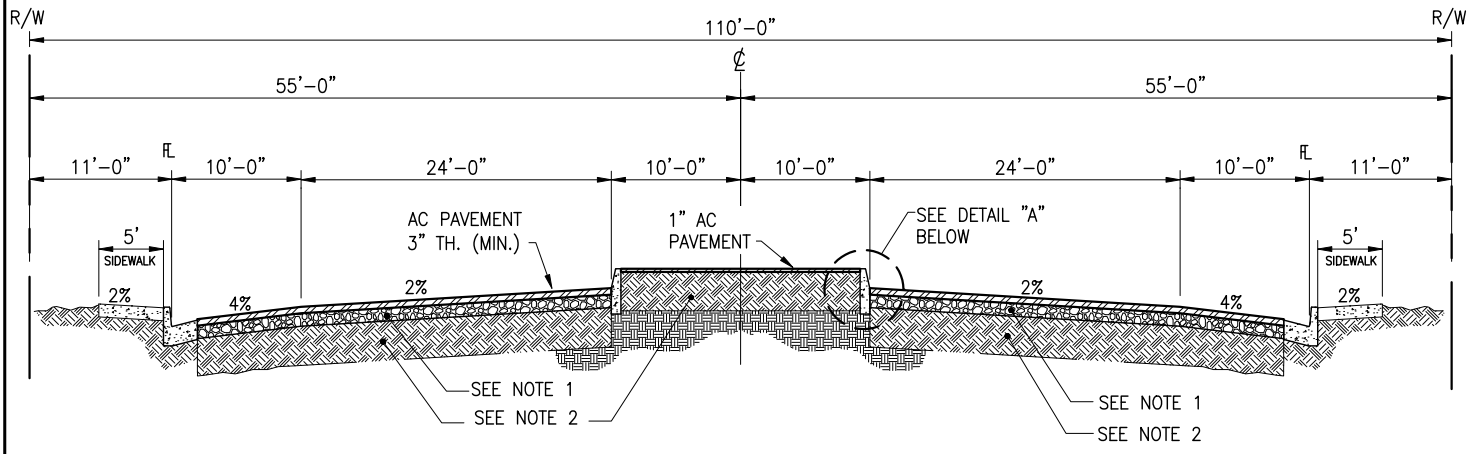

110' RIGHT OF WAY
MAJOR ARTERIAL STREET

NOTE:
TURNING LANE TO BE CONSTRUCTED WITHIN MEDIAN AREA WHERE REQUIRED.

NOTES:

1) CLASS 2 OR 3 AGGREGATE BASE MATERIAL (MIN 8" THICK) TO BE COMPACTED TO 95% RELATIVE DENSITY.

2) NATIVE MATERIAL TO A DEPTH OF 12" SHALL BE SCARIFIED & RECOMPCATED TO 95% RELATIVE DENSITY.

3) PERCENT RELATIVE DENSITY IS THE PERCENT OF MAX. DRY DENSITY AS DETERMINED BY ASTM D- 1557 (5 LAYER)

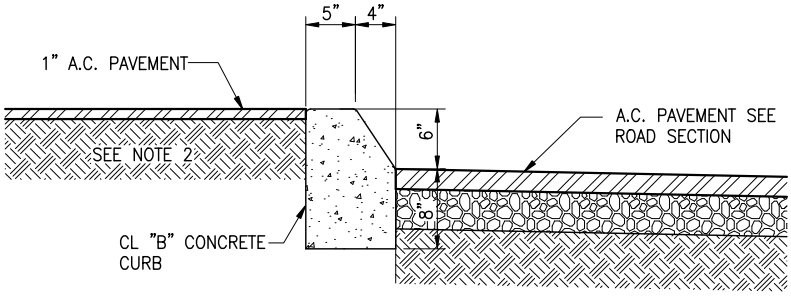

TYPICAL MEDIAN CURB DETAIL "A"

DATE	REVISION

CITY OF TEHACHAPI

MAJOR ARTERIAL
TYPICAL STREET SECTIONS

BOYLE ENGINEERING CORPORATION

DATE DRAWN	SHEET NO.
01/06	5.1

DWG: S:\T08_standard details\L1691_5-1.DWG USER: dghiorducci
DATE: Mar 03, 2008 1:47pm XREFS: BORDER

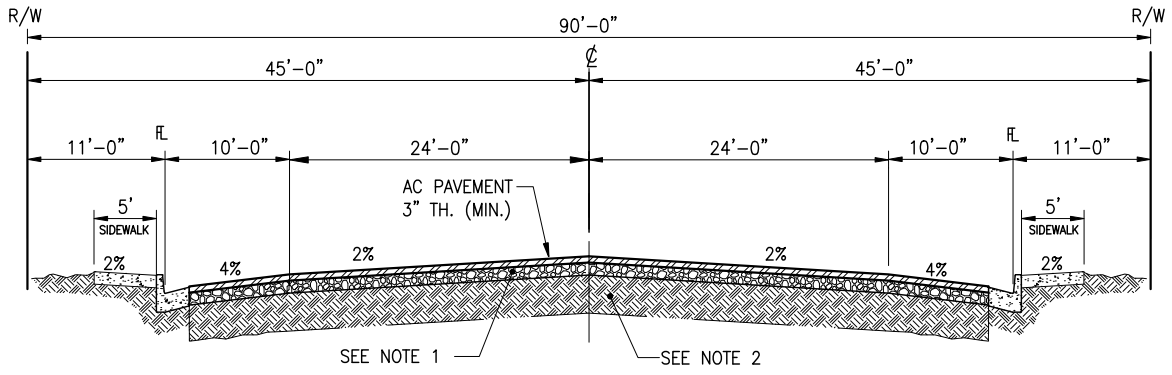

90' RIGHT OF WAY
MINOR ARTERIAL STREETS

NOTES:

1) CLASS 2 OR 3 AGGREGATE BASE MATERIAL (MIN 8" THICK) TO BE COMPACTED TO 95% RELATIVE DENSITY.

2) NATIVE MATERIAL TO A DEPTH OF 12" SHALL BE SCARIFIED & RECOMPCATED TO 95% RELATIVE DENSITY.

3) PERCENT RELATIVE DENSITY IS THE PERCENT OF MAX. DRY DENSITY AS DETERMINED BY ASTM D- 1557 (5 LAYER)

DWG: S:\T08_standard details\L1691_5-2.DWG USER: dghilarducci
DATE: Mar 03, 2008 1:47pm XREFS: BORDER

DATE	REVISION

CITY OF TEHACHAPI

MINOR ARTERIAL
TYPICAL STREET SECTIONS

BOYLE ENGINEERING CORPORATION

DATE DRAWN	SHEET NO.
01/06	5.2

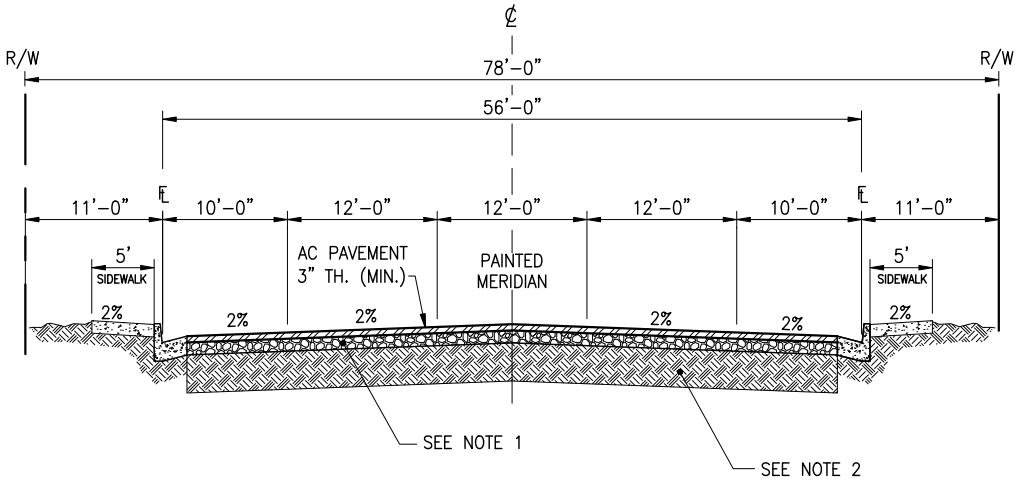

78' RIGHT OF WAY
INDUSTRIAL COLLECTOR STREET

NOTES:

1) CLASS 2 OR 3 AGGREGATE BASE MATERIAL (MIN 8" THICK) TO BE COMPACTED TO 95% RELATIVE DENSITY.

2) NATIVE MATERIAL TO A DEPTH OF 12" SHALL BE SCARIFIED & RECOMPCATED TO 95% RELATIVE DENSITY.

3) PERCENT RELATIVE DENSITY IS THE PERCENT OF MAX. DRY DENSITY AS DETERMINED BY ASTM D– 1557 (5 LAYER)

DWG: S:\T08_standard details\L1691_5-3.DWG USER: dghilorduccl
DATE: Mar 03, 2008 1:48pm XREFS: BORDER

DATE	REVISION

CITY OF TEHACHAPI

INDUSTRIAL COLLECTOR
TYPICAL STREET SECTION

BOYLE ENGINEERING CORPORATION

DATE DRAWN	SHEET NO.
01/06	5.3

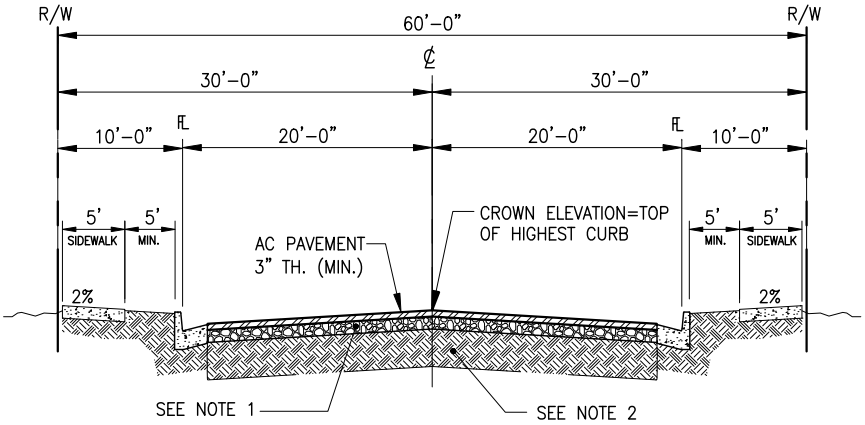

60' RIGHT OF WAY
RESIDENTIAL
LOCAL STREETS

NOTES:

1) CLASS 2 OR 3 AGGREGATE BASE MATERIAL (MIN 8" THICK) TO BE COMPACTED TO 95% RELATIVE DENSITY.

2) NATIVE MATERIAL TO A DEPTH OF 12" SHALL BE SCARIFIED & RECOMPCATED TO 95% RELATIVE DENSITY.

3) PERCENT RELATIVE DENSITY IS THE PERCENT OF MAX. DRY DENSITY AS DETERMINED BY ASTM D– 1557 (5 LAYER)

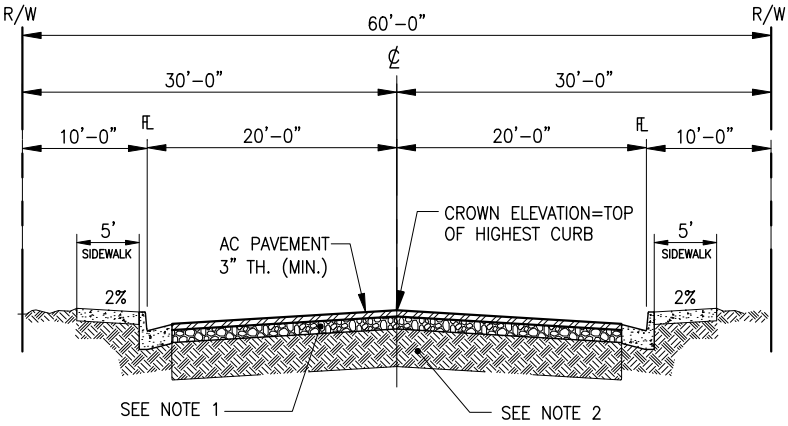

60' RIGHT OF WAY
OTHER LOCAL STREETS

		CITY OF TEHACHAPI		
		LOCAL TYPICAL STREET SECTION		
10/07	ADDENDUM NO.1	BOYLE ENGINEERING CORPORATION	DATE DRAWN 01/06	SHEET NO. 5.4
DATE	REVISION			

DWG: S:\T08_standard details\L1691_5-4.DWG USER: dghilarducci
DATE: Mar 03, 2008 1:48pm XREFS: BORDER

NOTE:
APPLY TACK COAT TO ALL EXISTING AC & CONCRETE SURFACES THAT WILL BE IN CONTACT WITH NEW AC PAVING PRIOR TO PLACING A.C.

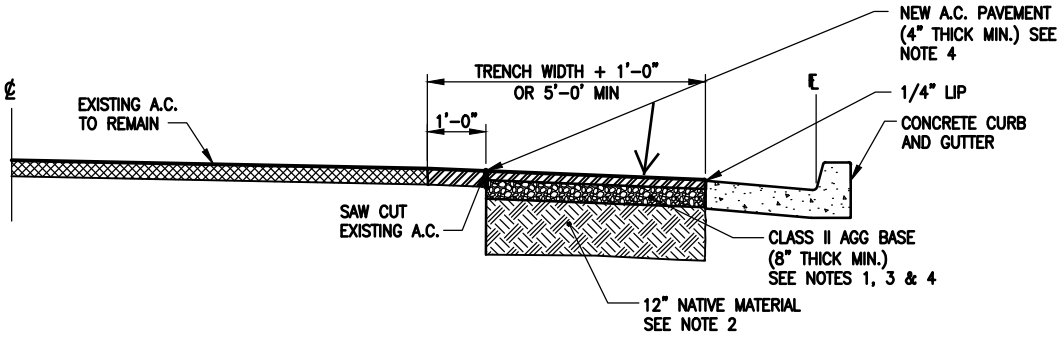

CURB ADJACENT PATCH

NOTES:

1. CLASS II AGGREGATE BASE MATERIAL (MIN 8" THICK) TO BE COMPACTED TO 95% RELATIVE DENSITY.
2. NATIVE MATERIAL TO BE SCARIFIED & RECOMPACTED TO 95% RELATIVE COMPACTION
3. STREET ZONE TO BE COMPACTED TO 95% RELATIVE DENSITY IF WITHIN ROADBED OR TO 90% RELATIVE DENSITY IF OUTSIDE OF ROADBED. SEE APPLICABLE STANDARD SPECIFICATIONS FOR EARTHWORK.
4. PAVEMENT INCLUDING PLACEMENT OF AGGREGATE BASE SHALL BE THE GREATER OF THOSE SPECIFIED OR THOSE FOUND UNDER EXISTING CONDITIONS.

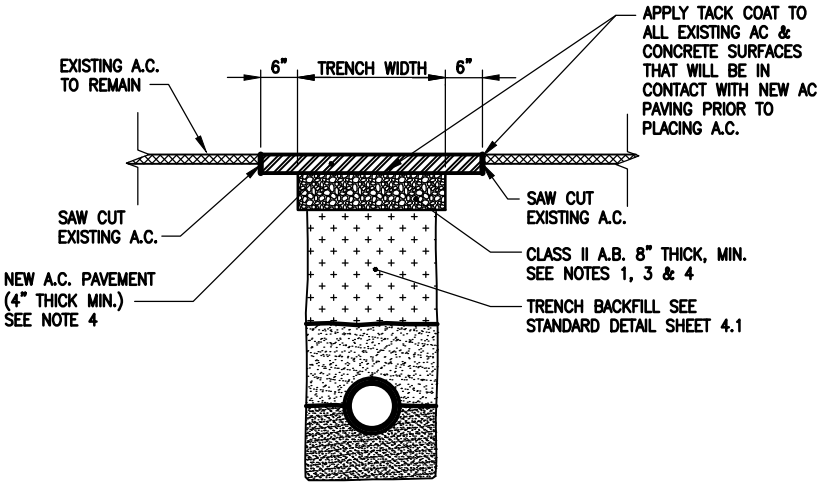

TRENCH DETAIL

		CITY OF TEHACHAPI		
		A.C. OVERLAY AND PATCH DETAILS		
1/15	ADDENDUM NO. 2	BOYLE ENGINEERING CORPORATION	DATE DRAWN 01/06	SHEET NO. 5.5
DATE	REVISION			

DWG: S:\T06_standard details\LI691_5-5.dwg USER: campbeliv
DATE: Jan 07, 2015 10:30am XREFS: BORDER

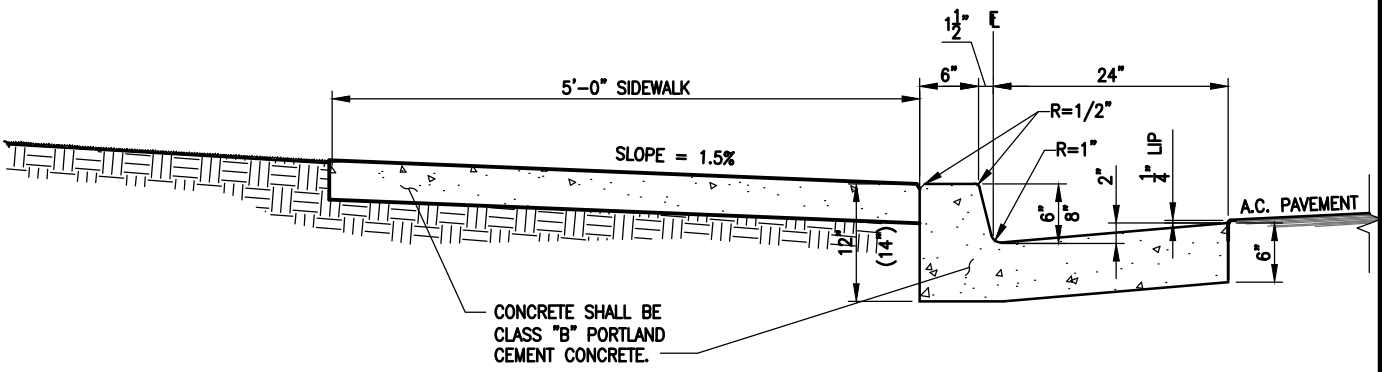

NOTES:

1. SUBGRADE FOR CURB AND GUTTER SHALL BE THOROUGHLY WATERED AND ROLLED OR TAMPED TO 95% RELATIVE DENSITY TO A DEPTH OF 12 INCHES. SUBGRADE AND FORMS SHALL BE THOROUGHLY WETTED BEFORE PLACING CONCRETE.

2. SUBGRADE FOR SIDEWALK SHALL BE THOROUGHLY WATERED AND ROLLED OR TAMPED TO 90% RELATIVE DENSITY TO A DEPTH OF 6-INCHES.

3. SIDEWALKS SHALL BE SCREENED TO SECTION, COMPACTED WITH METAL GRID TO GIVE A LAYER OF MORTAR 3/8-INCH THICK ON THE SURFACE, FINISHED WITH A WOODEN FLOAT TO A MAXIMUM VARIATION OF 1/8-INCH FROM THE EDGE OF A 5-FOOT STRAIGHTEDGE, TROWELED SMOOTH AND FINISHED WITH A FINE HAIR PUSH BROOM TRANSVERSE TO THE DIRECTION OF TRAFFIC.

4. CONCRETE FOR CURBS, GUTTERS AND SIDEWALKS SHALL BE CLASS "B" (5 SACK) AND TO THE DIMENSIONS SHOWN ON THIS PLAN.

5. EXPANSION JOINTS SHALL BE PLACED AT ENDS OF CURB RETURNS AND 100-FOOT INTERVALS IN CURB AND GUTTER AND 20-FOOT INTERVALS IN SIDEWALKS.

6. TOP AND FACE OF CURB SHALL BE TROWELED SMOOTH AND FINISHED WITH A FINE BRUSH. GUTTERS SHALL BE GIVEN A BROOM FINISH WITH STROKES PARALLEL TO THE LINE OF THE GUTTER.

7. SIDEWALKS SHALL BE SCORED AT SPACING EQUAL TO SIDEWALK WIDTH.

8. CONCRETE SHALL BE CURED BY IMMEDIATE APPLICATION OF A WHITE PIGMENTED SEALING COMPOUND.

9. USE OF 8" CURB VS. 6" CURB SHALL BE AS OUTLINED IN SECTION 5.3.13 OF THE CITY STANDARDS.

10. PERCENT RELATIVE DENSITY IS THE PERCENT OF MAXIMUM DRY DENSITY AS DETERMINED BY ASTM D-1557 (5 LAYER).

		CITY OF TEHACHAPI		
		CURB, GUTTER, & SIDEWALK DETAILS		
1/15	ADDENDUM NO. 2			
10/07	ADDENDUM NO.1	BOYLE ENGINEERING CORPORATION	DATE DRAWN 01/06	SHEET NO. 5.6
DATE	REVISION			

DWG: S:\T08_standard details\L1691_5-6.dwg USER: campbellv
DATE: Dec 11, 2014 2:08pm XREFS: BORDER

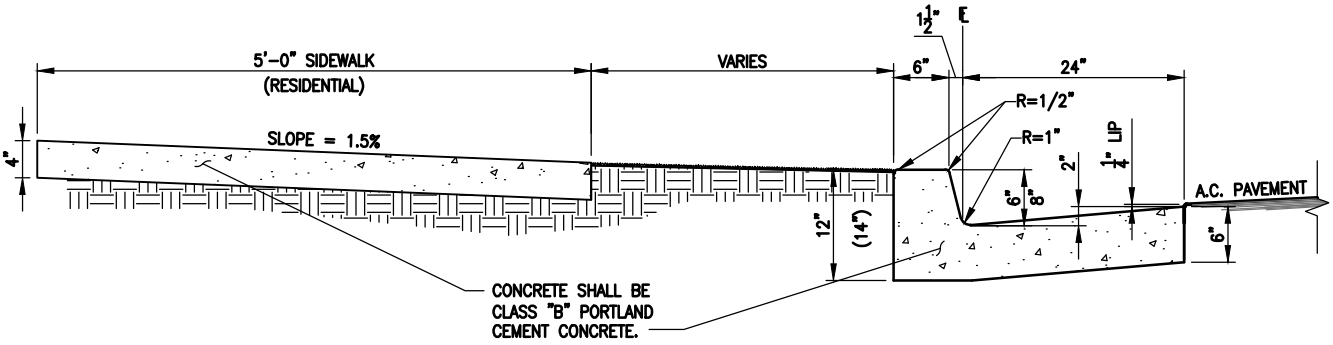

NOTES:

1. SUBGRADE FOR CURB AND GUTTER SHALL BE THOROUGHLY WATERED AND ROLLED OR TAMPED TO 95% RELATIVE DENSITY TO A DEPTH OF 12 INCHES. SUBGRADE AND FORMS SHALL BE THOROUGHLY WETTED BEFORE PLACING CONCRETE.

2. SUBGRADE FOR SIDEWALK SHALL BE THOROUGHLY WATERED AND ROLLED OR TAMPED TO 90% RELATIVE DENSITY TO A DEPTH OF 6-INCHES.

3. SIDEWALKS SHALL BE SCREENED TO SECTION, COMPACTED WITH METAL GRID TO GIVE A LAYER OF MORTAR 3/8-INCH THICK ON THE SURFACE, FINISHED WITH A WOODEN FLOAT TO A MAXIMUM VARIATION OF 1/8-INCH FROM THE EDGE OF A 5-FOOT STRAIGHTEDGE, TROWELED SMOOTH AND FINISHED WITH A FINE HAIR PUSH BROOM TRANSVERSE TO THE DIRECTION OF TRAFFIC.

4. CONCRETE FOR CURBS, GUTTERS AND SIDEWALKS SHALL BE CLASS "B" (5 SACK) AND TO THE DIMENSIONS SHOWN ON THIS PLAN.

5. EXPANSION JOINTS SHALL BE PLACED AT ENDS OF CURB RETURNS AND 100-FOOT INTERVALS IN CURB AND GUTTER AND 20-FOOT INTERVALS IN SIDEWALKS.

6. TOP AND FACE OF CURB SHALL BE TROWELED SMOOTH AND FINISHED WITH A FINE BRUSH. GUTTERS SHALL BE GIVEN A BROOM FINISH WITH STROKES PARALLEL TO THE LINE OF THE GUTTER.

7. SIDEWALKS SHALL BE SCORED AT SPACING EQUAL TO SIDEWALK WIDTH.

8. CONCRETE SHALL BE CURED BY IMMEDIATE APPLICATION OF A WHITE PIGMENTED SEALING COMPOUND.

9. USE OF 8" CURB VS. 6" CURB SHALL BE AS OUTLINED IN SECTION 5.3.13 OF THE CITY STANDARDS.

10. PERCENT RELATIVE DENSITY IS THE PERCENT OF MAXIMUM DRY DENSITY AS DETERMINED BY ASTM D-1557 (5 LAYER).

		CITY OF TEHACHAPI		
		CURB, GUTTER, & SIDEWALK DETAILS		
1/15	ADDENDUM NO. 2			
10/07	ADDENDUM NO.1	BOYLE ENGINEERING CORPORATION	DATE DRAWN 01/06	SHEET NO. 5.6A
DATE	REVISION			

DWG: S:\T08_standard details\L1691_5-6A.dwg USER: campbellv
DATE: Dec 17, 2014 8:02am XREFS: BORDER

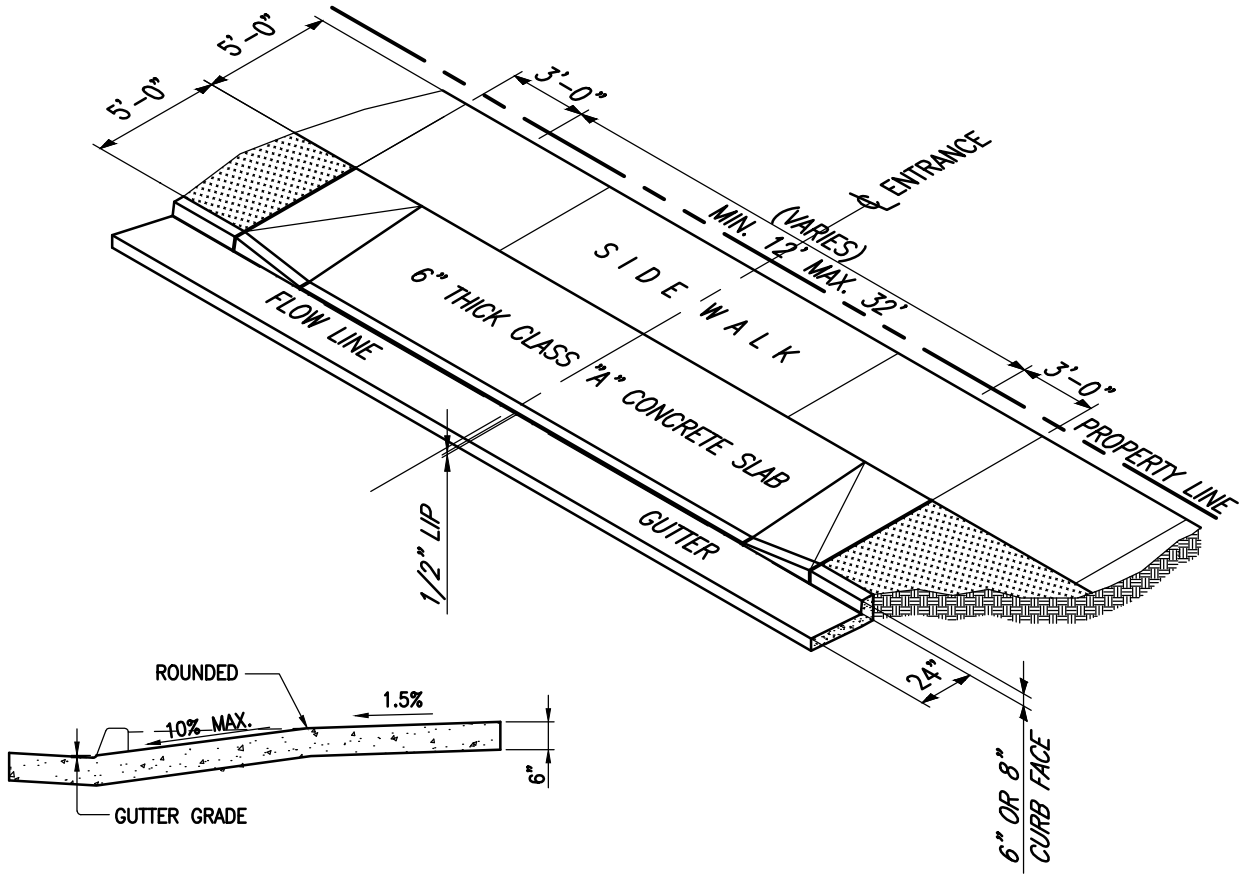

NOTES:

1. SUBGRADE SHALL BE THOROUGHLY WATERED AND ROLLED OR TAMPED TO 95% RELATIVE DENSITY TO A DEPTH OF 12 INCHES. SUBGRADE AND FORMS SHALL BE THOROUGHLY WETTED BEFORE PLACING CONCRETE.
2. DRIVEWAYS SHALL BE SCREENED TO SECTION, COMPACTED WITH METAL GRID TO GIVE A LAYER OF MORTAR 3/8-INCH THICK ON THE SURFACE, FINISHED WITH A WOODEN FLOAT TO A MAXIMUM VARIATION OF 1/8-INCH FROM THE EDGE OF A 5-FOOT STRAIGHTEDGE, TROWELED SMOOTH AND FINISHED WITH A FINE HAIR PUSH BROOM TRANSVERSE TO THE DIRECTION OF TRAFFIC.
3. CONCRETE FOR DRIVEWAYS SHALL BE CLASS "A" (6 SACK) 6-INCHES THICK.
4. WHEN SIDEWALKS HAVE NOT BEEN CONSTRUCTED, THE DRIVEWAY SHALL EXTEND TO THE THEORETICAL EDGE OF THE SIDE AS DETERMINED FROM DIMENSIONS OF THE STANDARD STREET SECTIONS.
5. DRIVEWAYS SHALL NOT ENCROACH ON CURB RETURNS AT INTERSECTIONS WITHOUT SPECIAL PERMISSION FROM THE CITY.
6. EXPANSION JOINTS SHALL BE PLACED AT EACH END OF THE DRIVEWAY.
7. CONCRETE SHALL BE CURED BY IMMEDIATE APPLICATION OF A WHITE PIGMENTED SEALING COMPOUND.
8. PERCENT RELATIVE DENSITY IS THE PERCENT OF MAXIMUM DRY DENSITY AS DETERMINED BY ASTM D-1557 (5 LAYER).

DATE	REVISION
1/15	ADDENDUM NO. 2
11/07	ADDENDUM NO.1

CITY OF TEHACHAPI

RESIDENTAL DRIVEWAY APPROACH DETAIL

BOYLE ENGINEERING CORPORATION

DATE DRAWN	SHEET NO.
01/06	5.7

DWG: S:\T08_standard details\L1691_5-7.dwg USER: campbellv
DATE: Dec 12, 2014 7:54am XREFS: BORDER

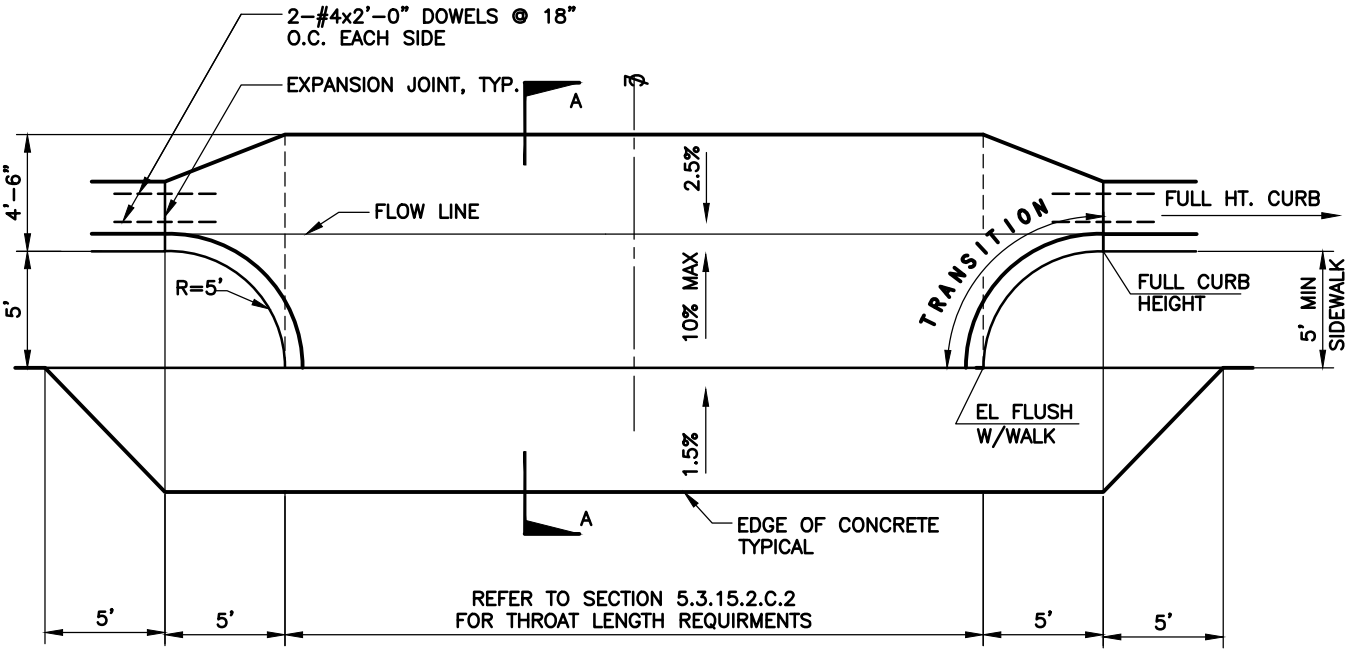

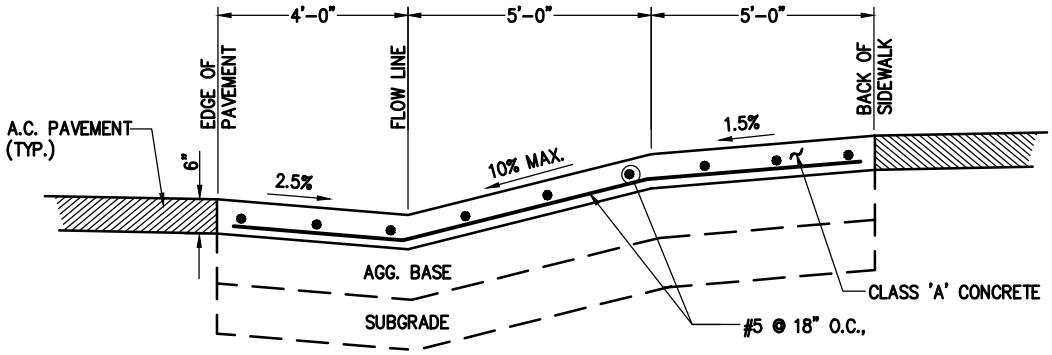

SECTION A-A

NOTES:

1. CONCRETE SHALL BE CLASS A CONCRETE.
2. REINFORCING STEEL SHALL HAVE 2-1/2" MIN. COVER.
3. PLACE 6-INCHES CLASS II AGGREGATE BASE COMPACTED TO 95% RELATIVE DENSITY OVER 12-INCHES NATIVE SOIL COMPACTED TO 95% RELATIVE DENSITY.

DATE	REVISION
1/15	ADDENDUM NO. 2
11/07	ADDENDUM NO.1

CITY OF TEHACHAPI

COMMERCIAL
DRIVEWAY APPROACH DETAILS

BOYLE ENGINEERING CORPORATION

DATE DRAWN	SHEET NO.
01/06	5.8

DWG: S:\T08_standard details\L1691_5-8.dwg USER: campbeliv
DATE: Dec 17, 2014 8:05am XREFS: BORDER

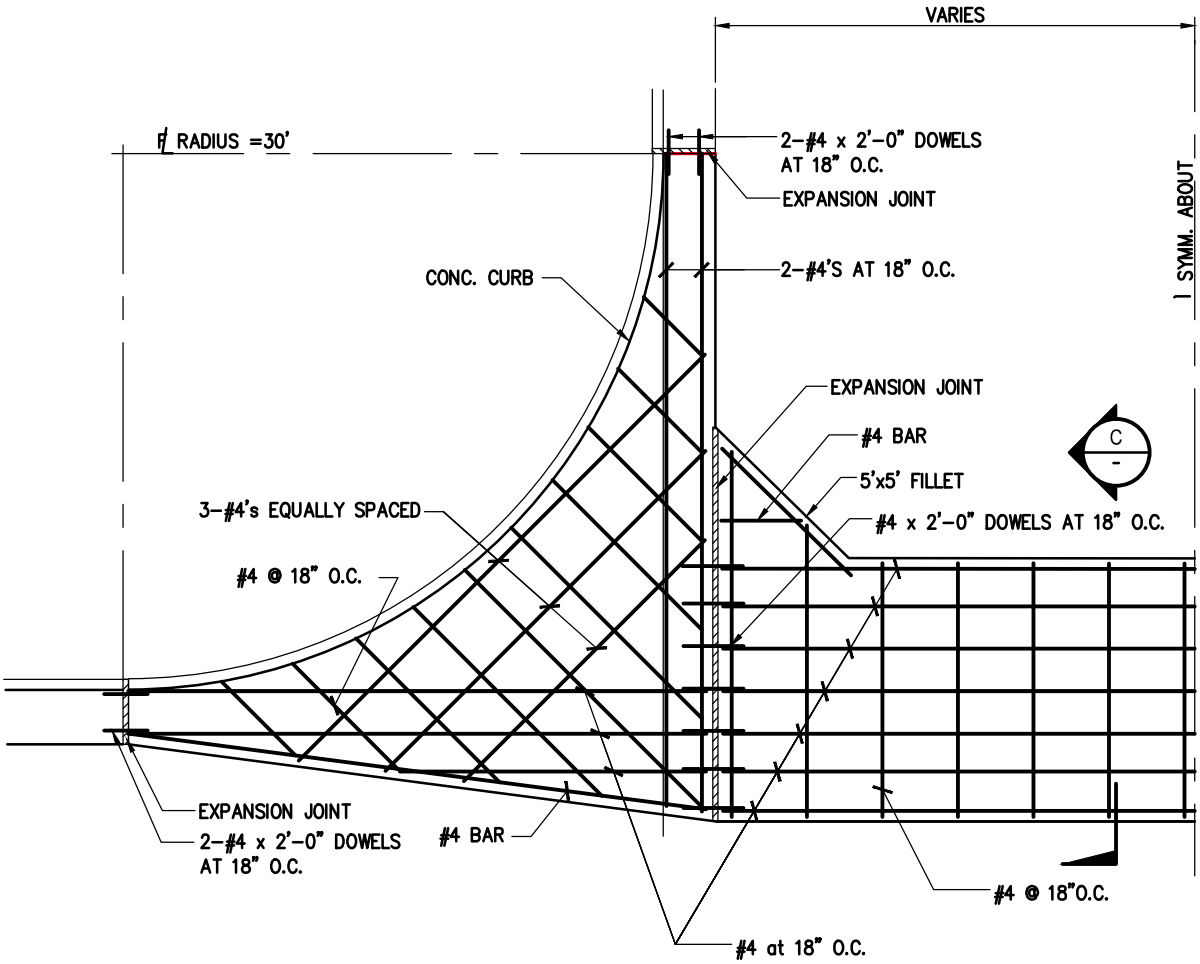

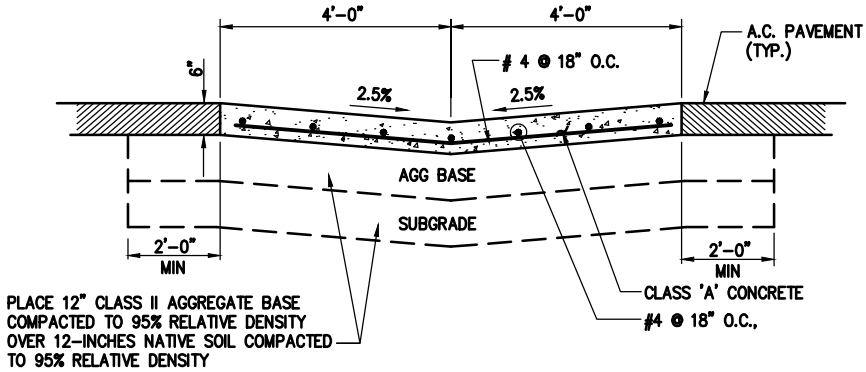

SECTION C
NOT TO SCALE

NOTES

1. CROSS GUTTER MAY BE 10' OR 20' WIDE (AS DIRECTED BY CITY)

2. REINFORCING STEEL SHALL HAVE 2-1/2" MIN. CON. COVER.

DATE	REVISION
1/15	ADDENDUM NO. 2
11/07	ADDENDUM NO.1

CITY OF TEHACHAPI

CROSS GUTTER DETAIL

BOYLE ENGINEERING CORPORATION

DATE DRAWN	SHEET NO.
01/06	5.9

DWG: S:\TOB_standard details\L1691_5-9.dwg USER: campbellv
DATE: Dec 12, 2014 7:58am XREFS: BORDER

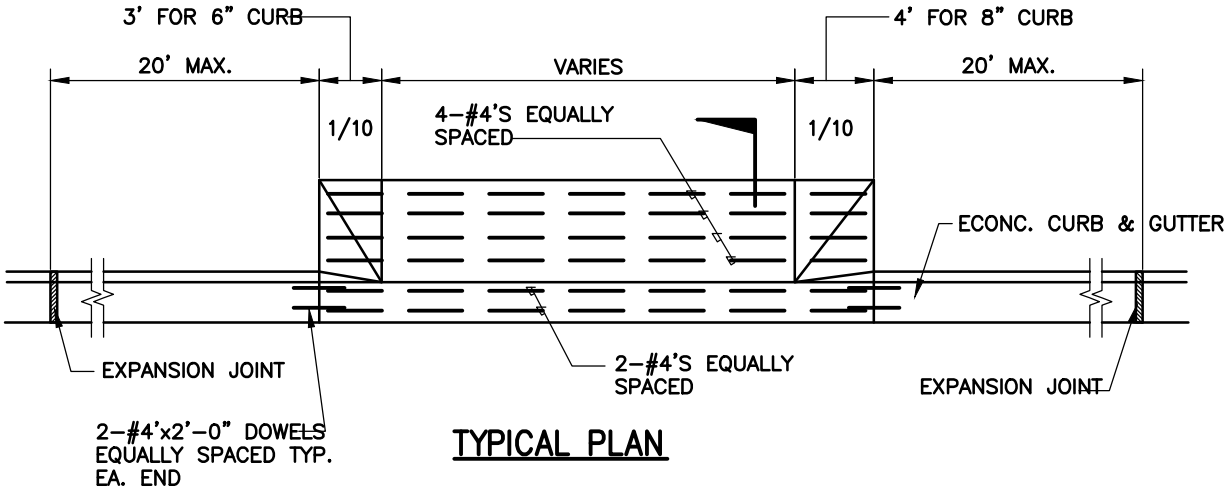

TYPICAL PLAN

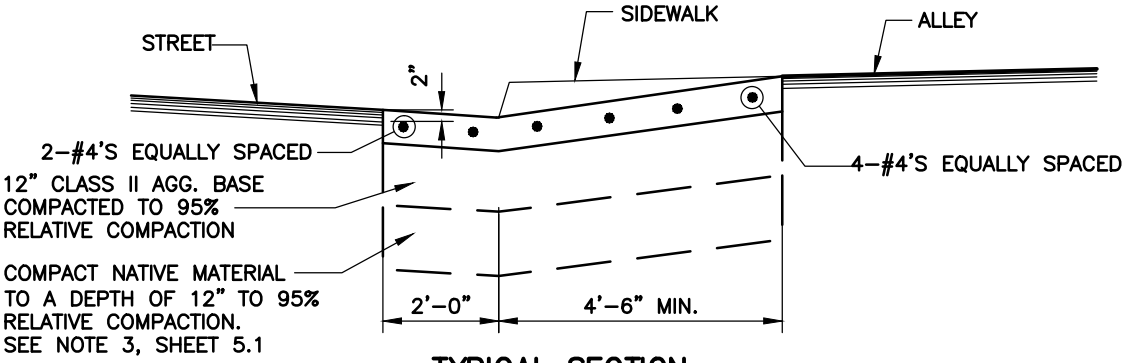

TYPICAL SECTION
ALLEY CROSS GUTTER DETAIL

		CITY OF TEHACHAPI		
		ALLEY DRIVEWAY APPROACH		
1/15	ADDENDUM NO. 2	BOYLE ENGINEERING CORPORATION	DATE DRAWN 01/06	SHEET NO. 5.10
DATE	REVISION			

DWG: S:\T08_standard details\L1691_5-10.dwg USER: campbellv
DATE: Dec 11, 2014 2:19pm XREFS: BORDER

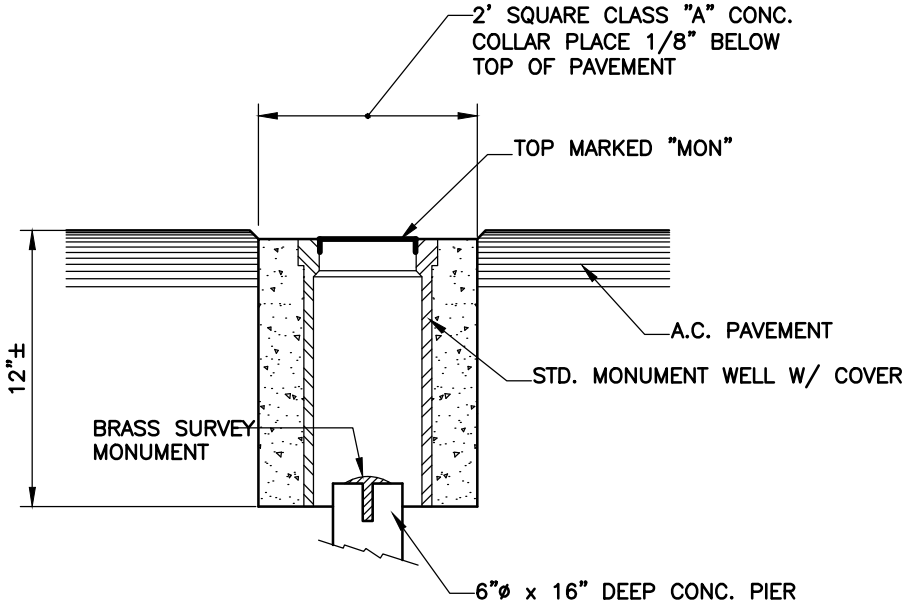

		CITY OF TEHACHAPI		
		SURVEY MONUMENT DETAIL		
1/15	ADDENDUM NO. 2	BOYLE ENGINEERING CORPORATION	DATE DRAWN 01/06	SHEET NO. 5.11
DATE	REVISION			

DWG: S:\T08_standard details\L1691_5-11.dwg USER: campbellv
DATE: Dec 11, 2014 2:21pm XREFS: BORDER

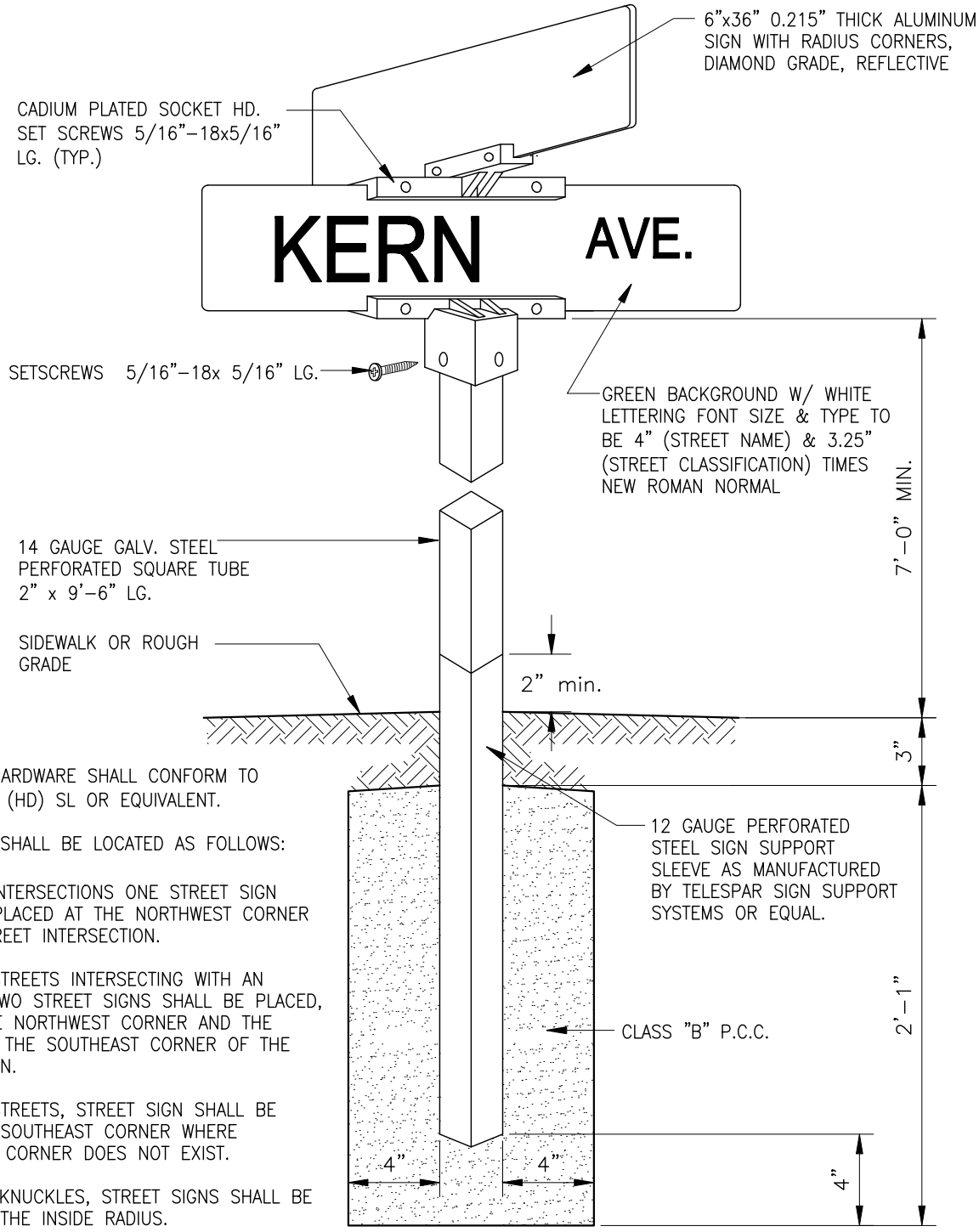

NOTES:

1) STREET SIGN HARDWARE SHALL CONFORM TO TYPE 808 V14 (HD) SL OR EQUIVALENT.

2) STREET SIGNS SHALL BE LOCATED AS FOLLOWS:

   a. AT LOCAL INTERSECTIONS ONE STREET SIGN SHALL BE PLACED AT THE NORTHWEST CORNER OF THE STREET INTERSECTION.

   b. AT LOCAL STREETS INTERSECTING WITH AN ARTERIAL, TWO STREET SIGNS SHALL BE PLACED, ONE AT THE NORTHWEST CORNER AND THE SECOND AT THE SOUTHEAST CORNER OF THE INTERSECTION.

   c. AT LOCAL STREETS, STREET SIGN SHALL BE PLACED AT SOUTHEAST CORNER WHERE NORTHWEST CORNER DOES NOT EXIST.

   d. AT STREET KNUCKLES, STREET SIGNS SHALL BE PLACED AT THE INSIDE RADIUS.

   e. AT ARTERIAL TEE INTERSECTIONS, ONE STREET SIGN SHALL BE PLACED OPPOSITE THE CENTER LINE OF THE INTERSECTING STREET.

3) STREET SIGNS SHALL BE PLACED 1 FT. OFF THE BACK OF THE SIDEWALK. WHERE SIDEWALK DOES NOT EXIST, PLACE 13 FT MIN. AWAY FROM FLOWLINE.

DATE	REVISION
11/07	ADDENDUM NO.1

CITY OF TEHACHAPI

STANDARD STREET SIGN DETAIL

BOYLE ENGINEERING CORPORATION

DATE DRAWN	SHEET NO.
01/06	5.12

DWG: S:\T08_standard details\L1691_5-12.dwg USER: dghilarducci
DATE: Mar 03, 2008 1:51pm XREFS: BORDER

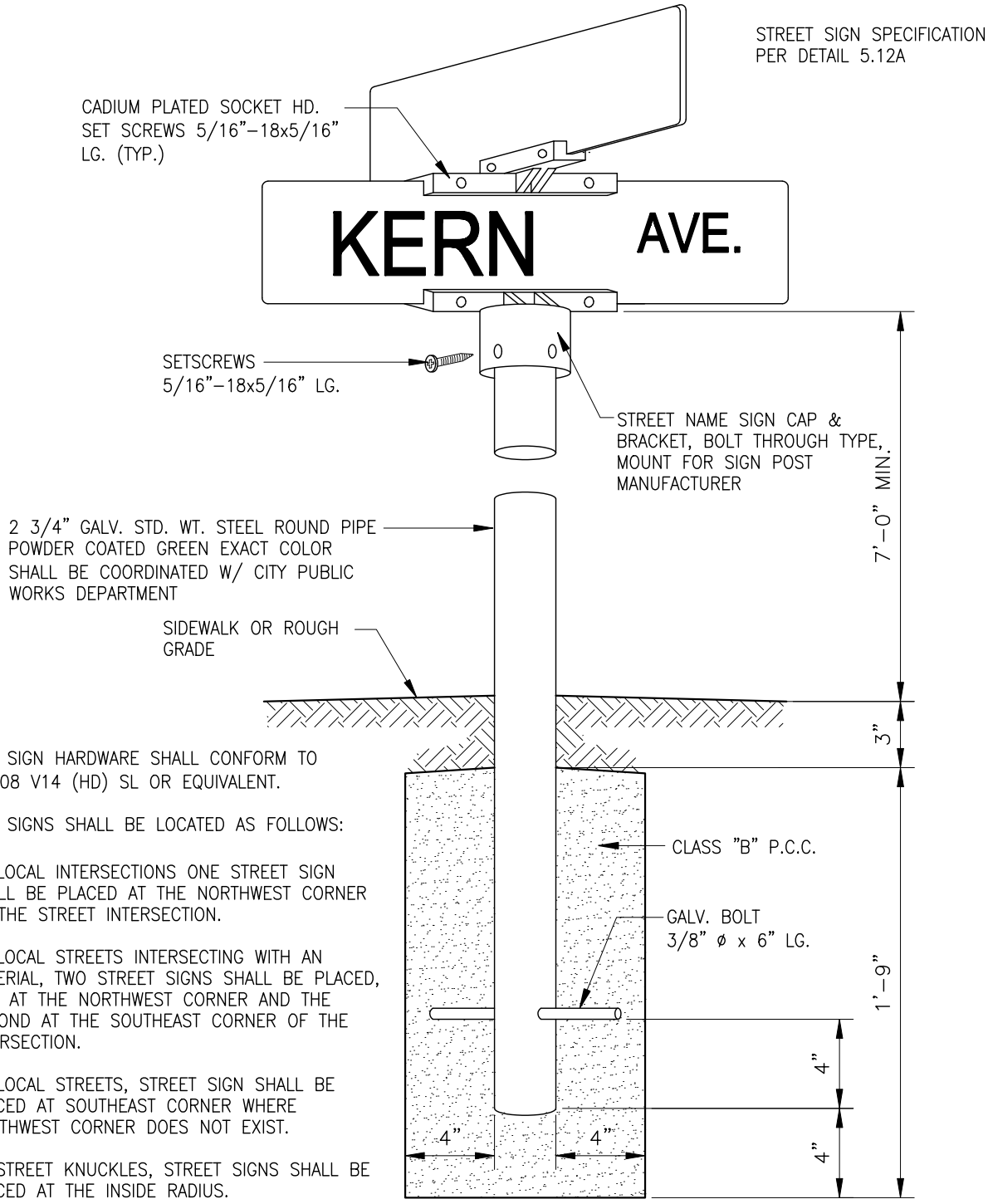

NOTES:

1) STREET SIGN HARDWARE SHALL CONFORM TO TYPE 808 V14 (HD) SL OR EQUIVALENT.

2) STREET SIGNS SHALL BE LOCATED AS FOLLOWS:

   a. AT LOCAL INTERSECTIONS ONE STREET SIGN SHALL BE PLACED AT THE NORTHWEST CORNER OF THE STREET INTERSECTION.

   b. AT LOCAL STREETS INTERSECTING WITH AN ARTERIAL, TWO STREET SIGNS SHALL BE PLACED, ONE AT THE NORTHWEST CORNER AND THE SECOND AT THE SOUTHEAST CORNER OF THE INTERSECTION.

   c. AT LOCAL STREETS, STREET SIGN SHALL BE PLACED AT SOUTHEAST CORNER WHERE NORTHWEST CORNER DOES NOT EXIST.

   d. AT STREET KNUCKLES, STREET SIGNS SHALL BE PLACED AT THE INSIDE RADIUS.

   e. AT ARTERIAL TEE INTERSECTIONS, ONE STREET SIGN SHALL BE PLACED OPPOSITE THE CENTER LINE OF THE INTERSECTING STREET.

3) STREET SIGNS SHALL BE PLACED 1 FT. OFF THE BACK OF THE SIDEWALK. WHERE SIDEWALK DOES NOT EXIST, PLACE 13 FT MIN. AWAY FROM FLOWLINE.

DATE	REVISION
11/07	ADDENDUM NO.1

CITY OF TEHACHAPI

STANDARD STREET SIGN DETAIL (DOWNTOWN AREA)

BOYLE ENGINEERING CORPORATION

DATE DRAWN	SHEET NO.
01/06	5.12A

DWG: S:\T08_standard details\L1691_5-12A.dwg USER: dghilarducci
DATE: Mar 03, 2008 1:52pm XREFS: BORDER

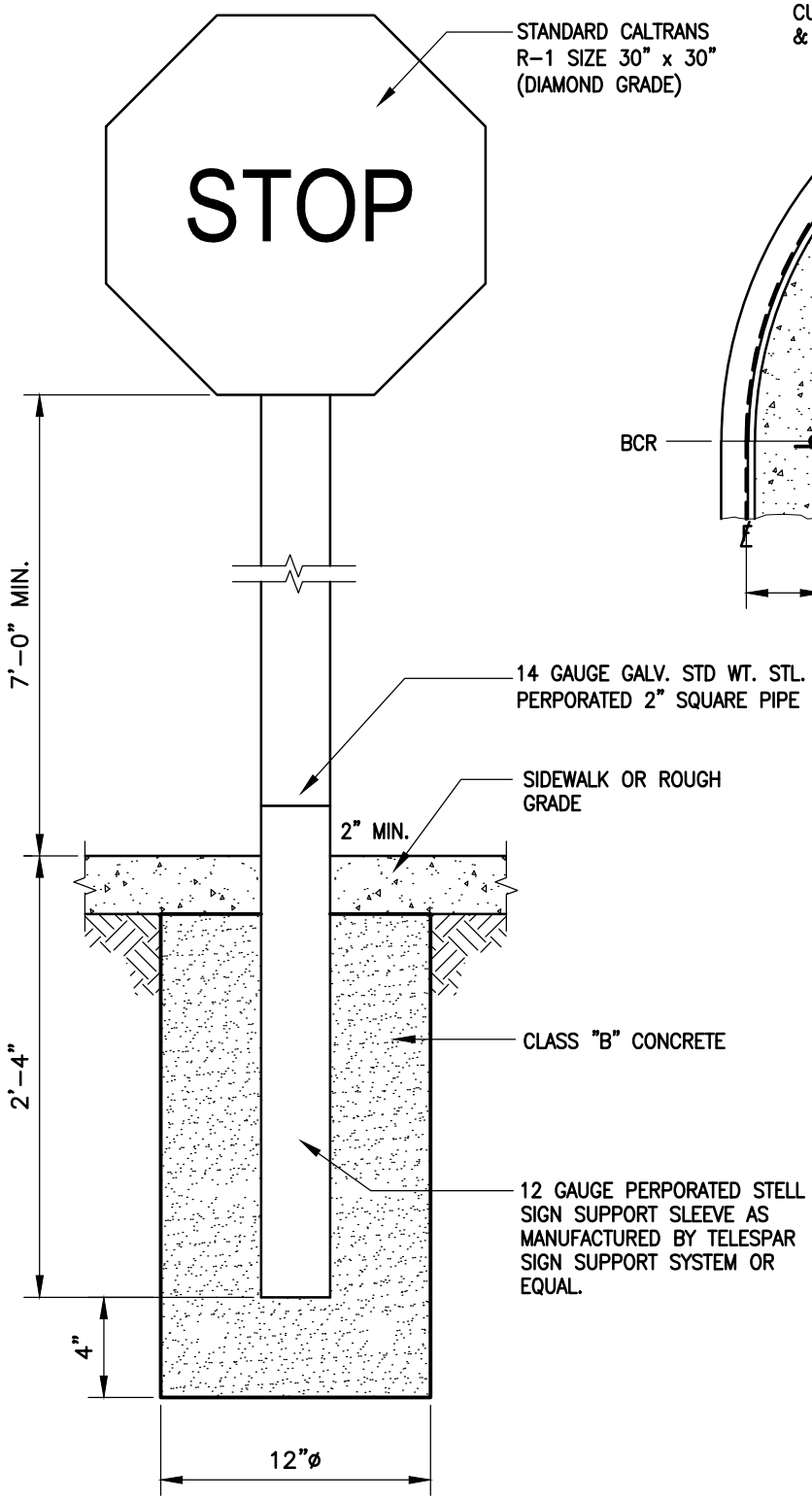

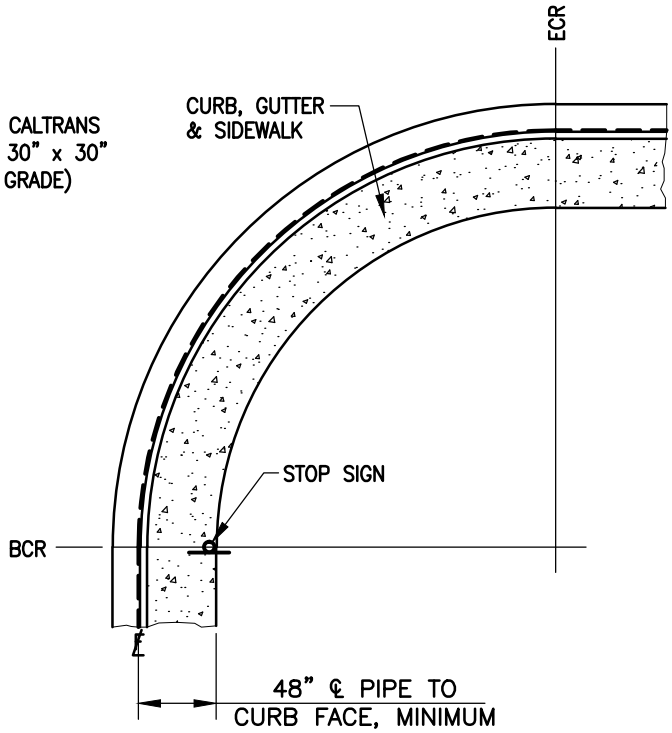

NOTE:

1. STEEL PIPE SHALL BE 2" STANDARD WEIGHT GALVANIZED SQUARE PIPE.
2. SIGN SHALL BE REFLECTORIZED.

		CITY OF TEHACHAPI		
		STANDARD STOP SIGN DETAIL		
1/15	ADDENDUM NO. 2			
11/07	ADDENDUM NO.1	BOYLE ENGINEERING CORPORATION	DATE DRAWN 01/06	SHEET NO. 5.13
DATE	REVISION			

DWG: S:\T08_standard details\L1691_5-13.dwg USER: campbeliv
DATE: Dec 11, 2014 2:22pm XREFS: BORDER

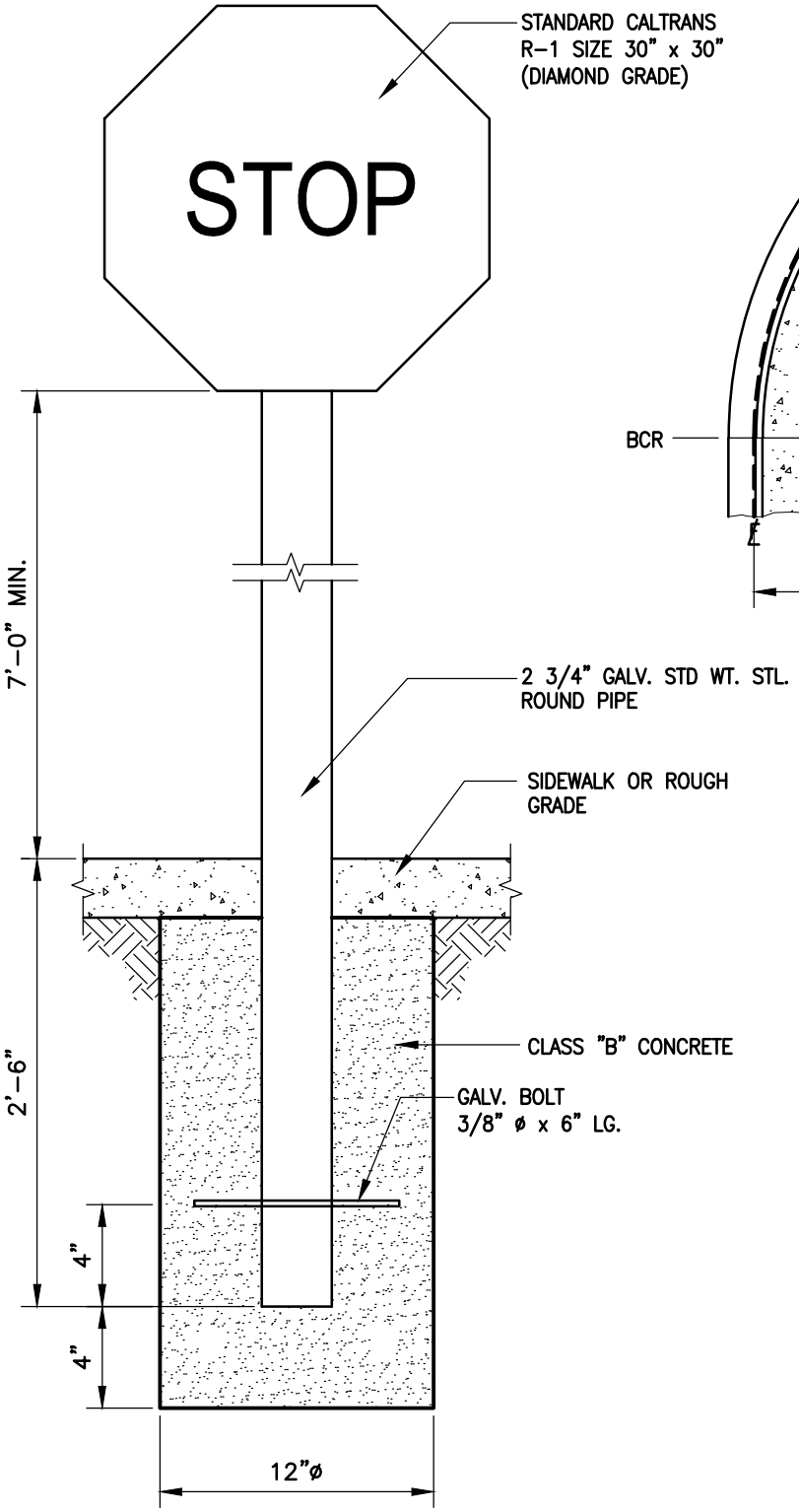

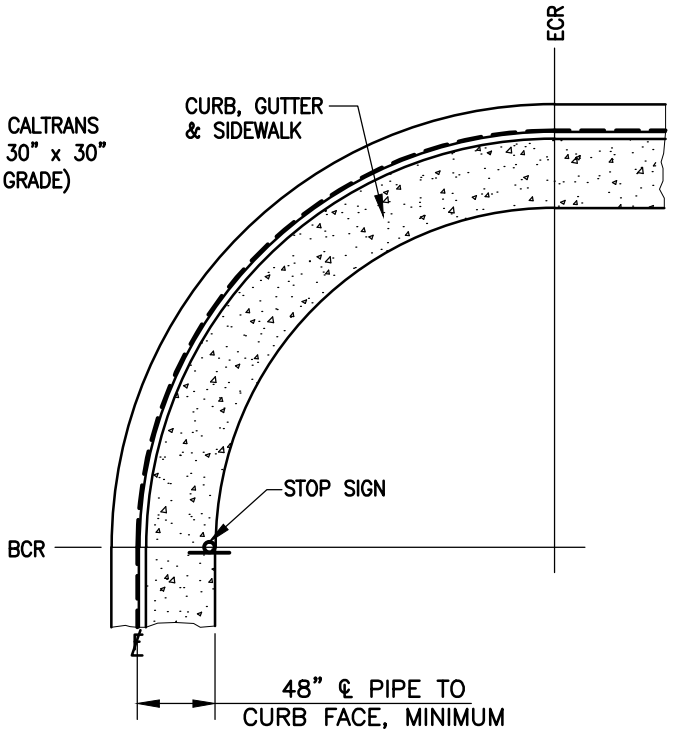

NOTE:

1. STEEL PIPE SHALL BE POWDER COATED GREEN. EXACT COLOR SHALL BE COORDINATTED W/ THE CITY'S PUBLIC WORKS DEPARMENT.
2. SIGN SHALL BE REFLECTORIZED.
3. SIGN INSTALLATION MOUNTING HARDWARE SHALL BE PROVIDED BY THE STREET SIGN MANUFACTURER.

DATE	REVISION
1/15	ADDENDUM NO. 2
11/07	ADDENDUM NO.1

CITY OF TEHACHAPI

STANDARD STOP SIGN DETAIL
(DOWNTOWN AREA)

BOYLE ENGINEERING CORPORATION

DATE DRAWN	SHEET NO.
01/06	5.13A

DWG: S:\T08_standard details\L1691_5-13A.dwg USER: campbelliv
DATE: Dec 11, 2014 2:49pm XREFS: BORDER

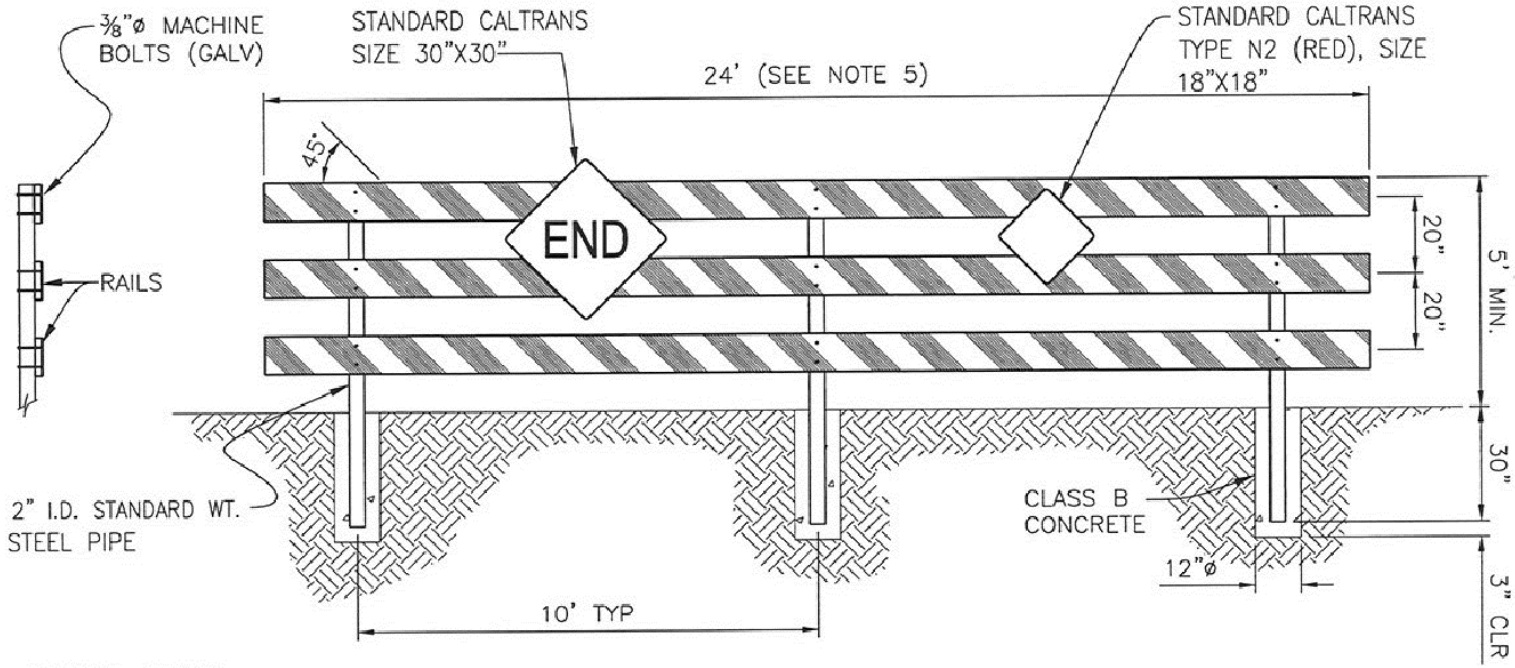

GENERAL NOTES:

1. MARKINGS FOR BARRICADE RAILS SHALL BE ORANGE AND WHITE STRIPES (SLOPING AT AN ANGLE OF 45°)

2. THE ENTIRE AREA OF THE ORANGE AND WHITE RAIL SHALL BE REFLECTORIZED AND SHALL MEET THE FOLLOWING MINIMUM DRY REFLECTIVE VALUES AT 0.2 AND 0.5 DEGREE DIVERGENCE, EXPRESSED IN UNITS OF CANDLEPOWER PER FOOT CANDLE PER SQUARE FOOT, AS MEASURED AT A DISTANCE OF 50 FEET FROM THE LIGHT SOURCE. THE WET REFLECTIVE VALUES SHALL BE A MINIMUM OF 90 PERCENT OF THE DRY VALUES. THE PREDOMINATE COLOR FOR OTHER BARRICADE COMPONENTS SHALL BE WHITE.

INCLUDED ANGLE	WHITE		ORANGE	
	0.2	0.5	0.2	0.5
-4	45.0	20.0	13.0	6.5
+30	20.0	11.0	6.5	2.9

3. SECTION 57, "TIMBER STRUCTURES" OF THE STANDARD SPECIFICATIONS, CURRENT EDITION, SHALL APPLY. ALL TIMBER TO BE DOUGLAS FIR CONSTRUCTION GRADE S4S.

4. RAILS SHALL BE NOMINAL 2"x8" OR 2"x10"

5. TOTAL WIDTH OF BARRICADE AND PLACEMENT OF TRAFFIC STANDARD SIGNS SHALL BE DETERMINED/APPROVED BY THE CITY ENGINEER.

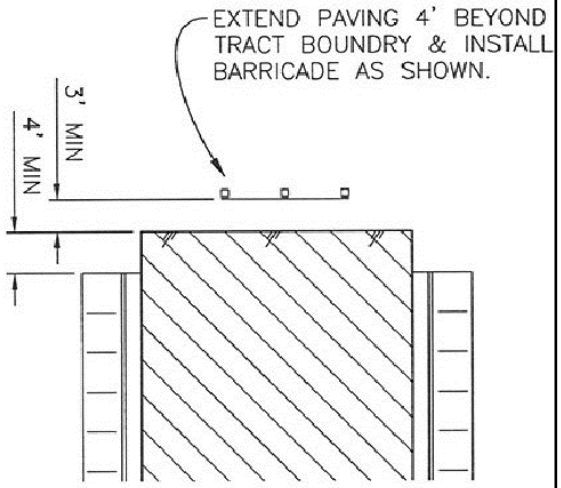

TYPICAL LOCATION

DATE	REVISION

CITY OF TEHACHAPI

BARRICADE
END OF STREET

BOYLE ENGINEERING CORPORATION

DATE DRAWN 01/06

SHEET NO. 5.14

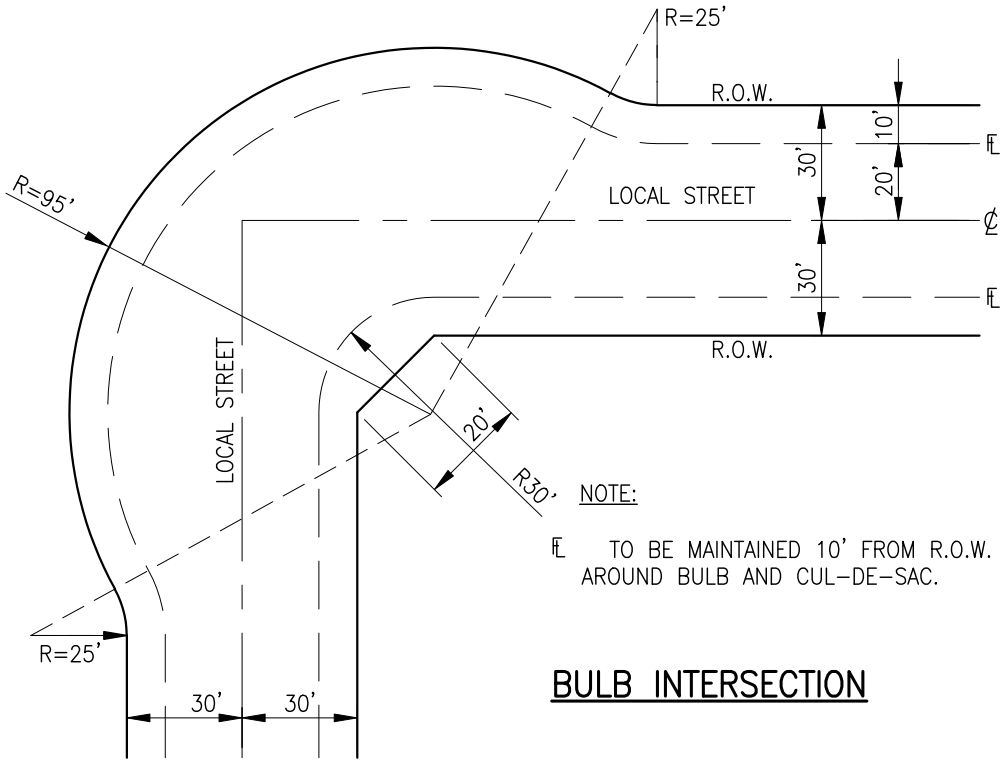

NOTE:

℄ TO BE MAINTAINED 10' FROM R.O.W. AROUND BULB AND CUL-DE-SAC.

BULB INTERSECTION

CURVE DATA				
NO.	DELTA	RAD	TAN.	LENGTH
A	265° 40' 00"	50.00'	–	231.88'
B	42° 50' 00"	25.00'	9.81'	18.69'
C	271° 55' 00"	40.00'	–	213.45'
D	45° 57' 47"	37.00'	15.69'	29.682'

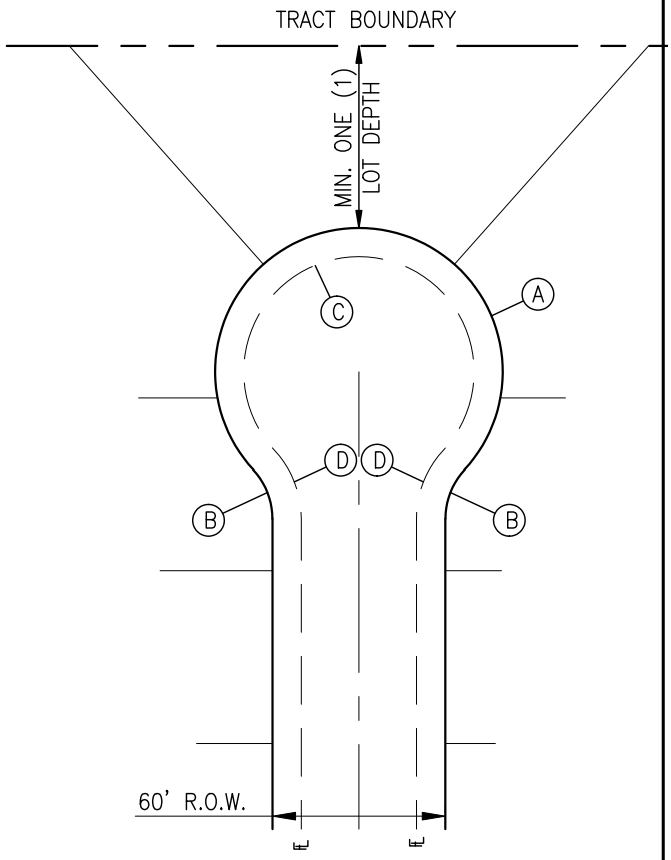

CUL-DE-SAC

		CITY OF TEHACHAPI
		BULB AND CUL-DE-SAC TREATMENT
11/07	ADDENDUM NO.1	BOYLE ENGINEERING CORPORATION — DATE DRAWN 10/07 — SHEET NO. 5.15
DATE	REVISION	

DWG: S:\T08_standard details\L1691_5-15.dwg USER: dghilarducci
DATE: Mar 03, 2008 1:54pm XREFS: BORDER

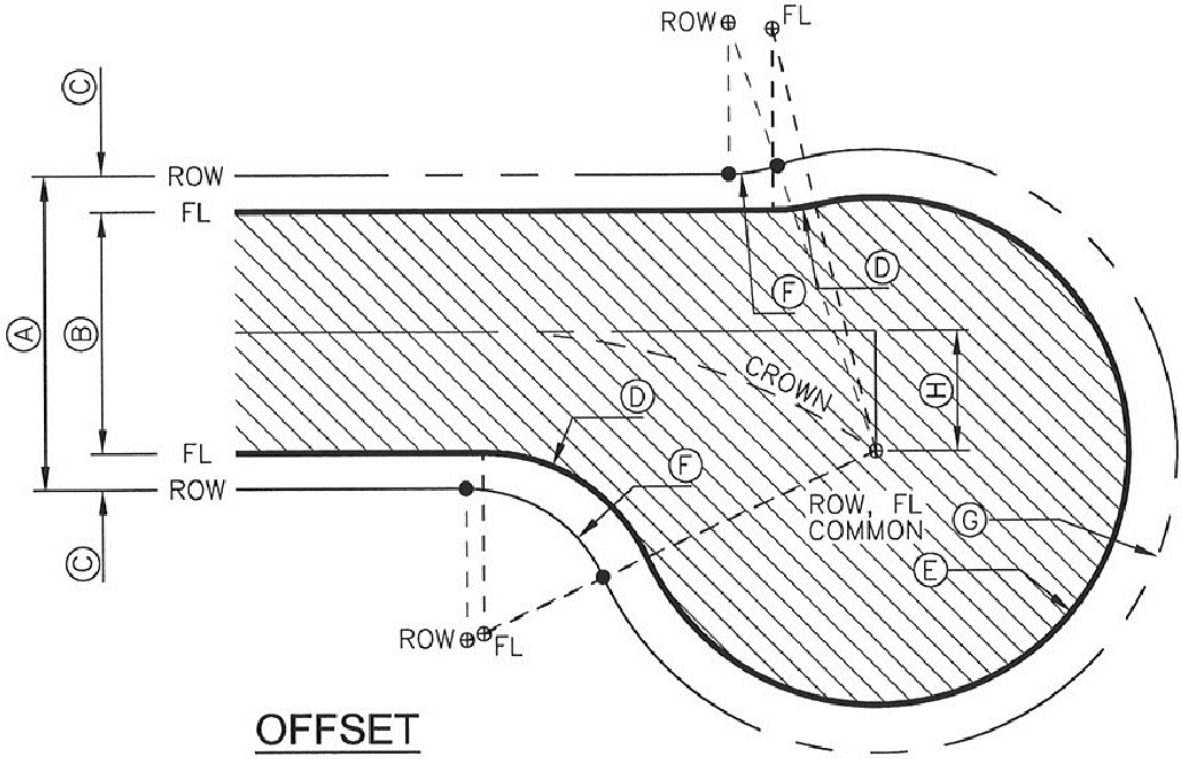

OFFSET

	STREET DIM			FL RADII		ROW RADII		OFFSET
	Ⓐ	Ⓑ	Ⓒ	Ⓓ	Ⓔ	Ⓕ	Ⓖ	Ⓗ
RESIDENTIAL CULDESAC, 60' ROW	60'	40'	10'	30'	40'	25'	50'	10'–22' AT 2' INTERVALS
INDUSTRIAL CULDESAC, 78' ROW	78'	56'	11'	30'	60'	25'	71'	10'–34' AT 2' INTERVALS

DWG: S:\T08_standard details\L1691_5-16.dwg USER: dghilarducci
DATE: Mar 03, 2008 2:57pm XREFS: BORDER

DATE	REVISION

CITY OF TEHACHAPI

OFFSET CUL DE SAC TREATMENT

BOYLE ENGINEERING CORPORATION

DATE DRAWN	SHEET NO.
01/06	5.16

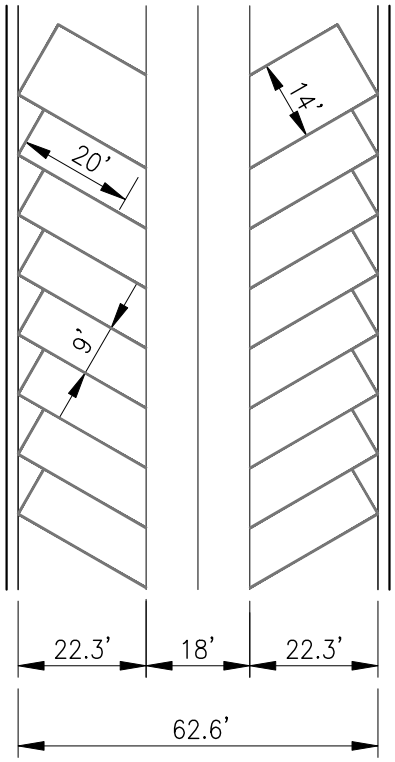

60° PARKING

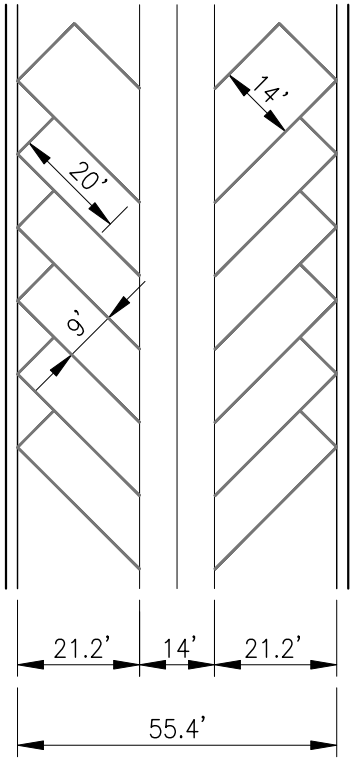

45° PARKING

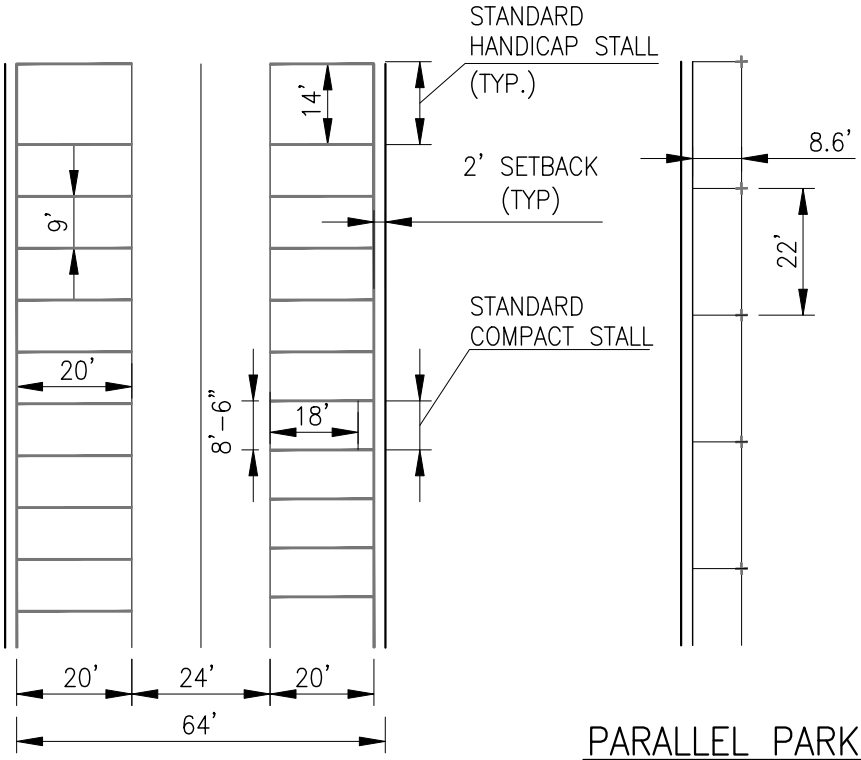

90° PARKING

PARALLEL PARKING

HANDICAP PARKING REQUIREMENTS	
TOTAL NUMBER OF SPACES REQUIRED	NUMBER OF HANDICAPED SPACES REQUIRED
1 – 40	1
41 – 80	2
81 – 120	3
121 – 160	4
161 – 300	5
301 – 400	6
401 – 500	7
501 & up	20+1 PER 100 OR FRACTION

NOTES:

1. SURFACING TO BE MIN. 2" A.C PAVEMENT OVER 4" CLASS 2 AGGREGATE BASE MATERIAL COMPACTED TO 95% RELATIVE DENSITY.
2. SUBGRADE UNDER SURFACING TO BE COMPACTED TO 95% RELATIVE COMPACTION TO A DEPTH OF 12"
3. THE NUMBER OF COMPACT SPACES SHALL NOT EXCEED 20% OF TOTAL REQUIRED SPACES.

10/07	ADDENDUM NO.1
DATE	REVISION

CITY OF TEHACHAPI

STANDARD PARKING STALL DETAILS

BOYLE ENGINEERING CORPORATION

DATE DRAWN	SHEET NO.
01/06	5.17

DWG: S:\T08_standard details\L1691_5-17.dwg USER: dghilarducci
DATE: Mar 03, 2008 1:55pm XREFS: BORDER

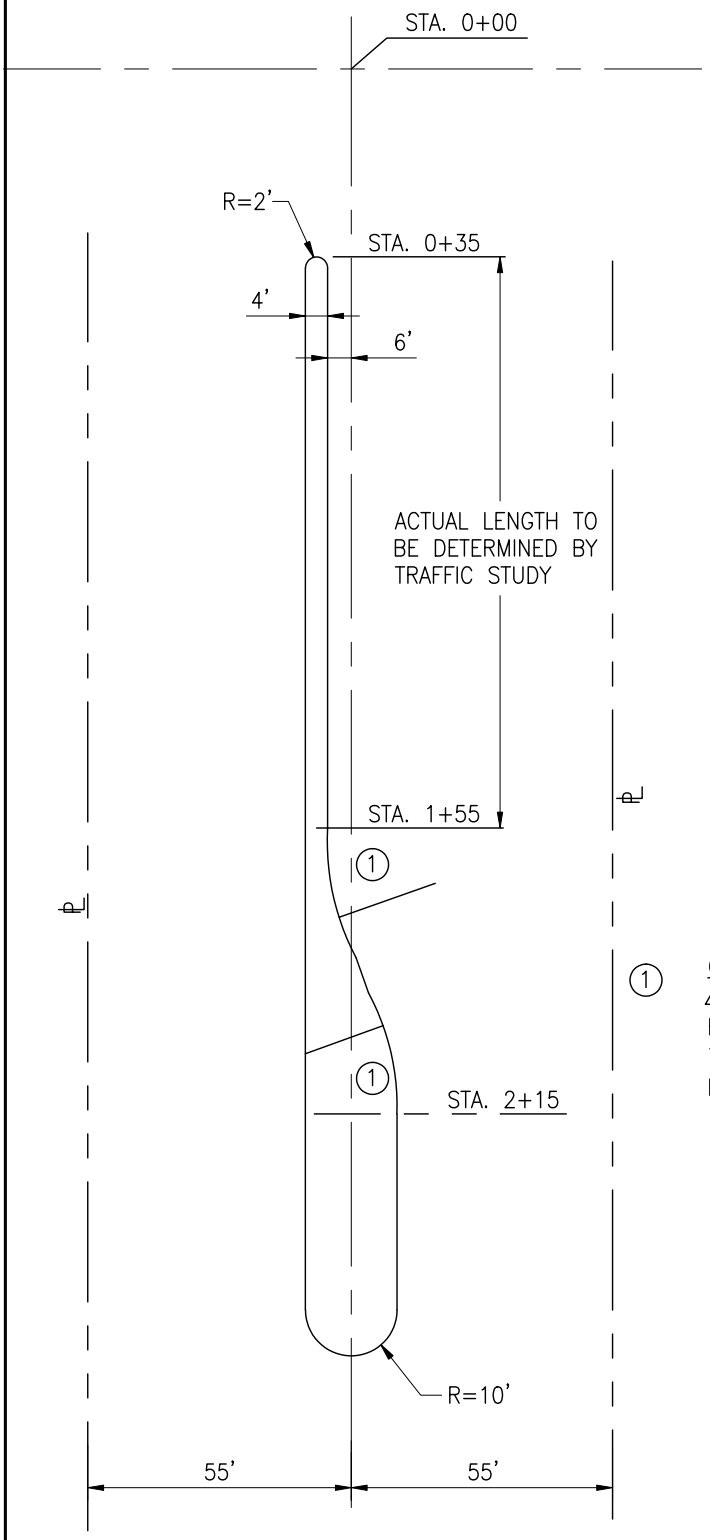

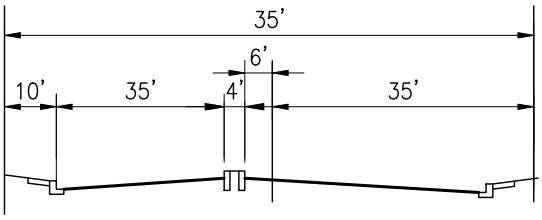

STATION 0+35 TO STATION 1+55

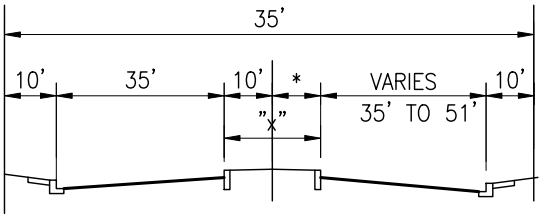

* VARIES – 0' TO 10'
X VARIES – 4' TO 20'

STATION 1+55 TO STATION 2+15

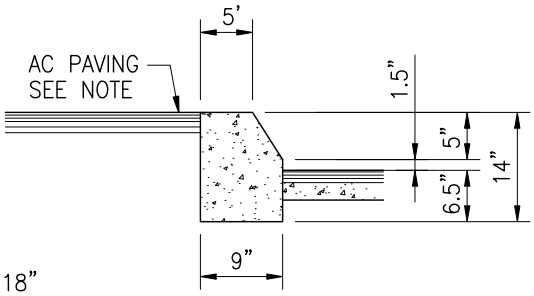

CURVE DATA
Δ = 21° 10' 18"
R = 50.00'
T = 9.34'
L = 18.47'

NOTE:
UNLESS OTHERWISE APPROVED BY THE CITY ENGINEER THE MEDIAN ISLAND IS TO BE PAVED WITH 2" A.C. OVER STERILIZED NATIVE SOIL COMPACTED TO 90%.

MEDIAN CURB

DATE	REVISION

CITY OF TEHACHAPI

MEDIAN/TURN LANE DETAIL

BOYLE ENGINEERING CORPORATION

DATE DRAWN	SHEET NO.
01/06	5.18

DWG: S:\TOR_standard details\L1691_5-18.dwg USER: dghilarducci
DATE: Mar 03, 2008 1:55pm XREFS: BORDER

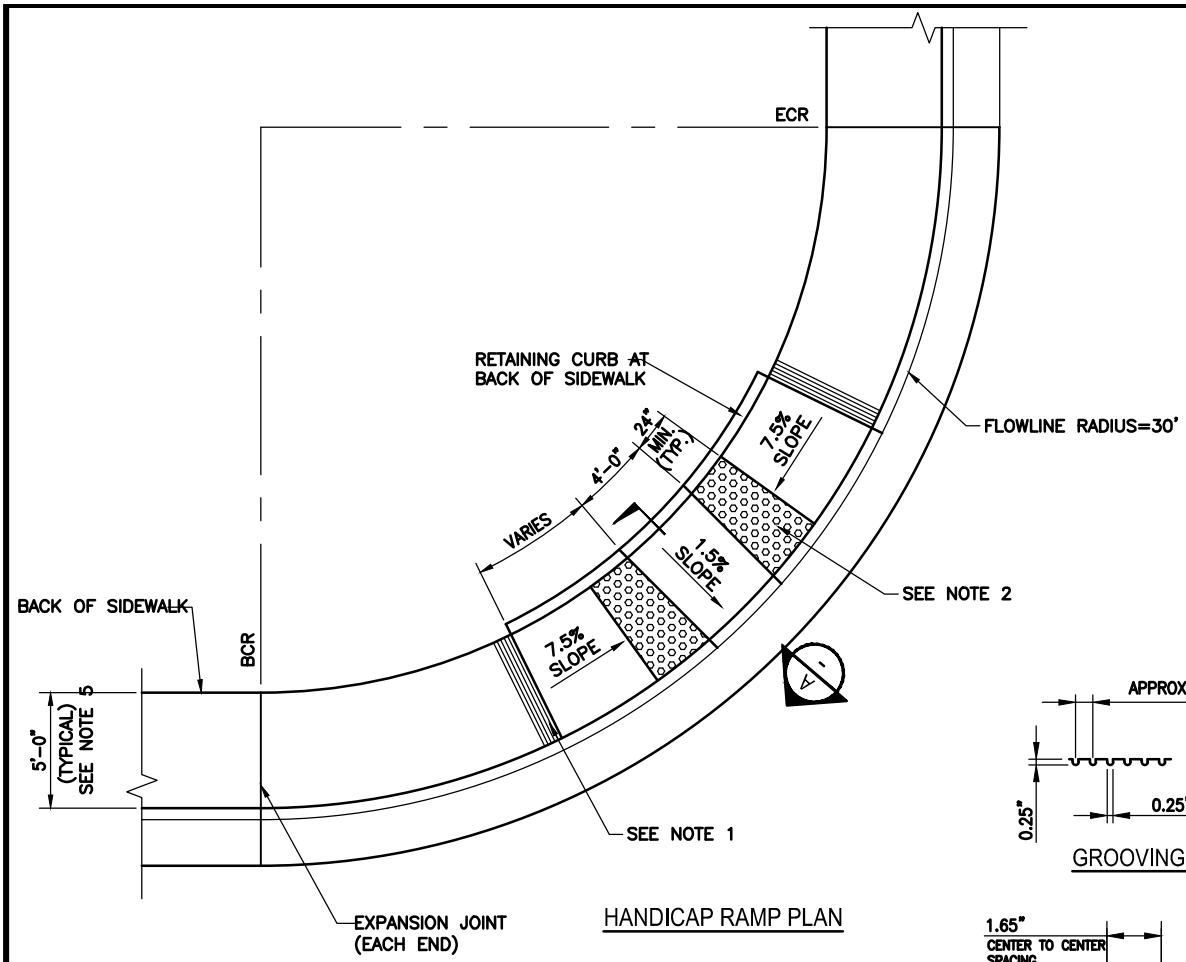

HANDICAP RAMP PLAN

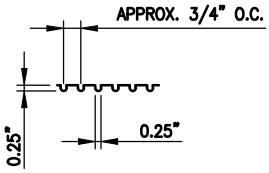

GROOVING DETAIL

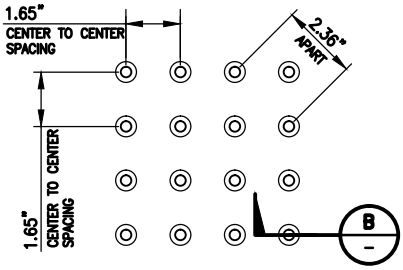

TRUNCATED DOMES TYPICAL PLAN

NOTES:

1. THE RAMP SHALL HAVE A 12-INCH WIDE BORDER WITH 1/4-INCH GROOVES. SEE GROOVING DETAIL.
2. THE RAMP SHALL HAVE ADA APROVED TRUNCATED DOME RIVER RED PAVERSTONE BRICKS OR APPROVED EQUAL. SEE TRUNCATED DOMES DETAIL.
3. CONSTRUCT HANDICAP RAMP AT ALL RETURNS.
4. COMPACTION REQUIREMENTS FOR WHEELCHAIR RAMP SEE STANDARD DETAIL 5.6
5. WHERE ADJACENT SIDEWALK WIDTH DIFFERS FROM 5-FEET, CONTRACTOR SHALL TAPER SIDEWALK WIDTH TO MATCH EXIST. WIDTH OVER 10-FEET.

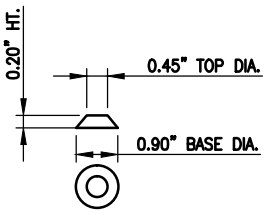

SECTION B

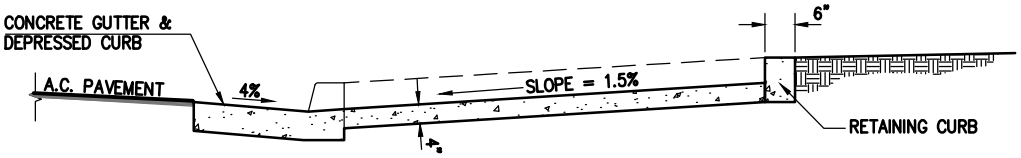

SECTION A

		CITY OF TEHACHAPI
		HANDICAP RAMP DETAIL
1/15	ADDENDUM NO. 2	
11/07	ADDENDUM NO.1	BOYLE ENGINEERING CORPORATION — DATE DRAWN 01/06 — SHEET NO. 5.19
DATE	REVISION	

DWG: S:\T08_standard details\L1691_5-19.dwg USER: campbellv
DATE: Jan 07, 2015 10:32am XREFS:

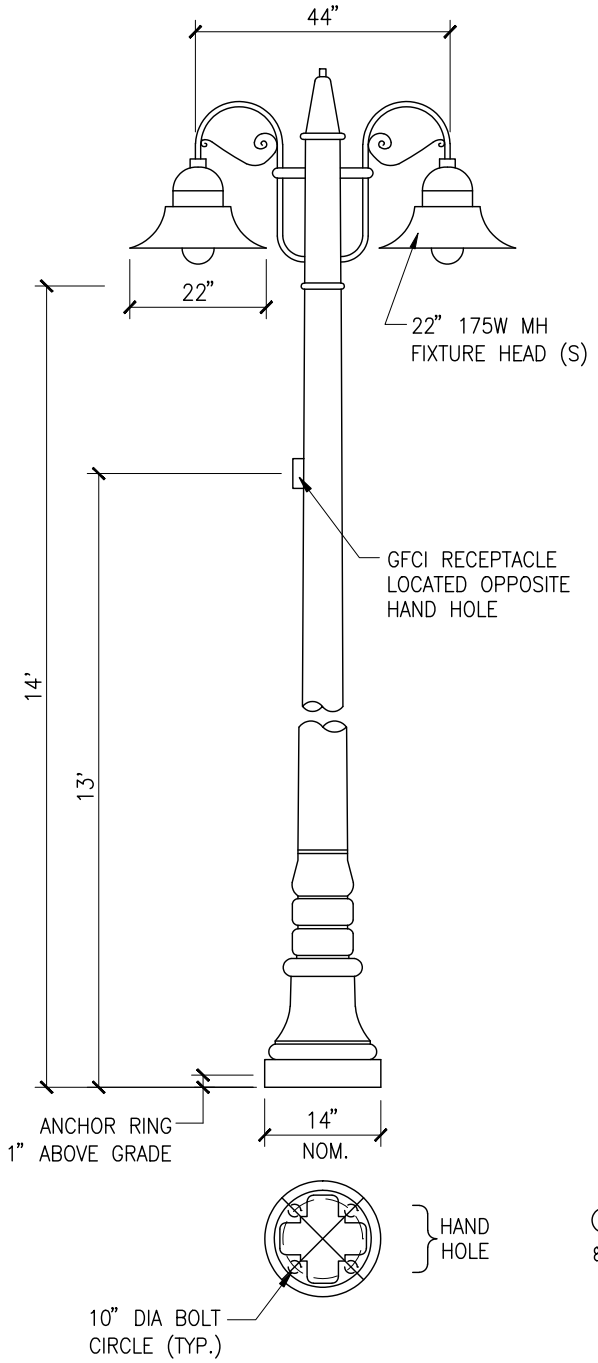

LUMINAIRE: **HOUSING** – HEAVY WALL ALUMINUM CONSTRUCTION. WITH REMOVABLE BALLAST TRAY FOR BALLAST ACCESS.
REFLECTOR – HEAVY WALL ALUMINUM CONSTRUCTION. INSIDE OF REFLECTOR FINISHED WITH HIGH GLOSS WITH ENAMEL.

OPTICS: OPAL GLASS DIFFUSER.

LA

LAMP HOLDER: MEDIUM BASE PORCELAIN.

LAMP: 175 W.M.H.

BALLAST: H.P.F. / C.W.A. AUTOTRANSFORMER, –20° STARTING TEMPERATURE. (SPECIFY VOLTAGE)

SHAFT: SPUN TAPERED FROM SEAMLESS 6063 ALLOY ALUMINUM. SHAFT HAS 5" BUTT TAPPERING TO 3" TOP. SHAFT IS CIRCUMFERENTIALLY WELDED TO BASE.

BASE: ONE PIECE CORROSION RESISTANT, DURABLE CAST ALUMINUM CONSTRUCTION. MINIMUM .225 WALL THICKENESS. BASE CONSISTS OF A WIDE SMOOTH, STEPPED BOTTOM SECTION AND A DECORATIVE TOP SECTION PROVIDED WITH HAND HOLE AND COVER. HAND HOLE COVER SUPPLIED WITH TAMPER RESISTANT HARDWARE. GROUNDING LUG PROVIDED INSIDE BASE OPPOSITE HAND HOLE.

ANCHORAGE: (4) 3/4"X24" FULLY GALVANIZED ANCHOR BOLTS. EACH BOLT SUPPLIED WITH TWO NUTS AND TWO WASHERS.

FINISH: ELECTROSTATICALLY APPLIED BAKED ON TEXTURED ACRYLIC ENAMEL. (COLOR DARK GREEN).

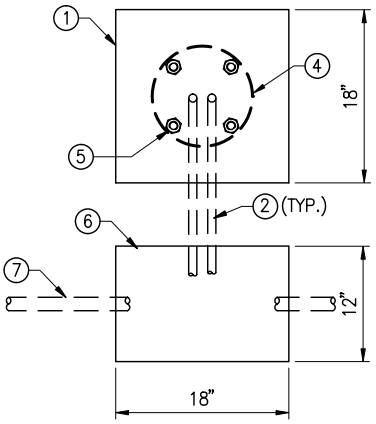

TYP. LIGHT LAYOUT DETAILS

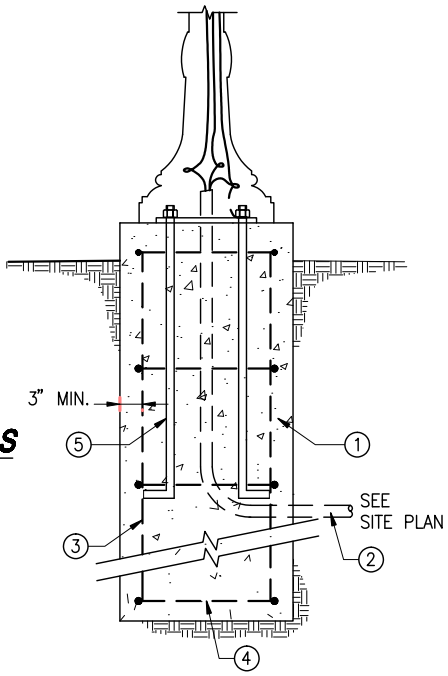

ELECTROLIER FOOTINGS

1. CLASS "A" TYPE CONCRETE, SEE CITY TEHACHAPI STANDARD SPECIFICATION.
2. PVC CONDUIT, 3/4".
3. (5) No. 4 REBAR VERTICAL, 3" CLEAR FROM EDGE OF FOOTING.
4. (4) No. 4 REBAR HORIZONTAL CONTINUOUS AS SHOWN.
5. 3/4"x24" ANCHOR NOLTS PER MANUFACTURER SPECS, (4) PER FOOTING TYPICAL.
6. CHRISTY BOX N9 ELECTRICAL BOX W/ FL9T LID.
7. PVC CONDUIT, SEE SITE PLAN.

DATE	REVISION
11/07	ADDENDUM NO.1

CITY OF TEHACHAPI

STREET LIGHT FOR NON-SPEAKER MOUNTED POLES

BOYLE ENGINEERING CORPORATION

DATE DRAWN	SHEET NO.
10/07	5.20

DWG: S:\T08_standard details\L1691_5-20.dwg
DATE: Mar 06, 2008 9:10am
XREFS:
USER: dghilarducci

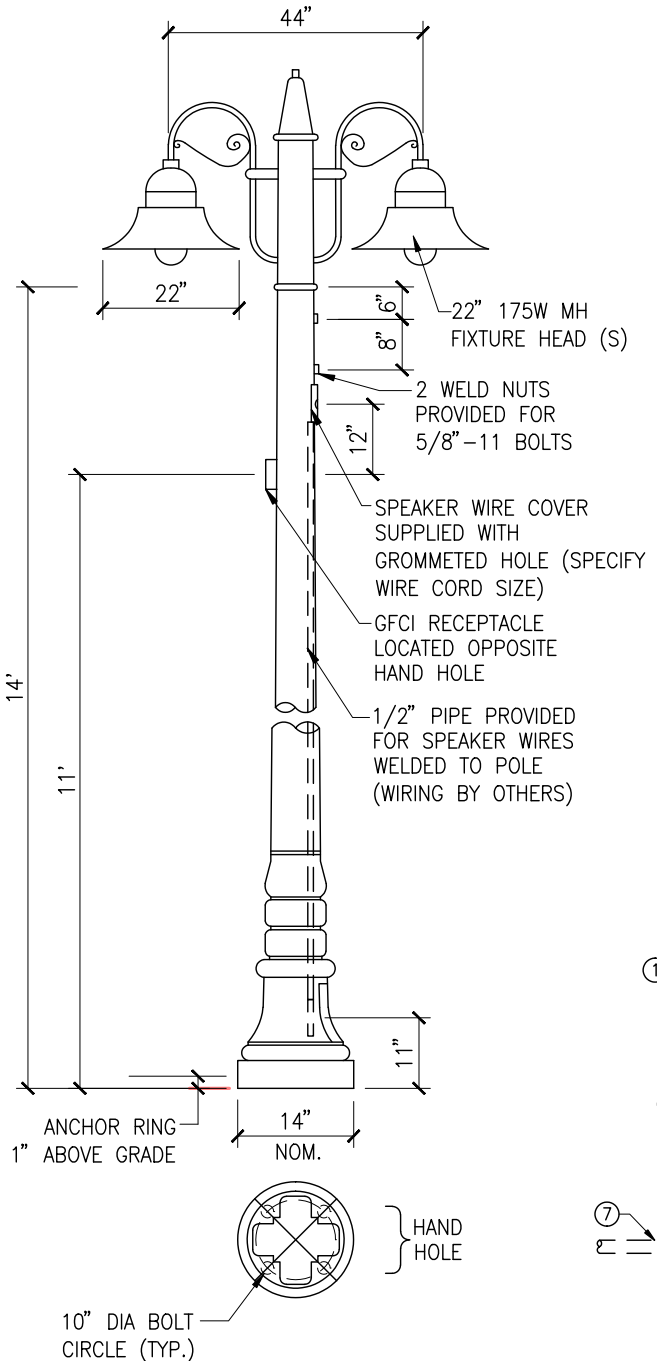

LUMINAIRE: **HOUSING** – HEAVY WALL ALUMINUM CONSTRUCTION. WITH REMOVABLE BALLAST TRAY FOR BALLAST ACCESS. **REFLECTOR** – HEAVY WALL ALUMINUM CONSTRUCTION. INSIDE OF REFLECTOR FINISHED WITH HIGH GLOSS WITH ENAMEL.

OPTICS: OPAL GLASS DIFFUSER.

LAMP HOLDER: MEDIUM BASE PORCELAIN.

LAMP: 175 W.M.H.

BALLAST: H.P.F / C.W.A. AUTOTRANSFORMER, –20° STARTING TEMPERATURE. (SPECIFY VOLTAGE)

SHAFT: FABRICATED FROM STEEL COIL STOCK, (11 GAGE) SHAFT HAS 5" BUTT, TAPERING TO 3.03" TOP MINIMUM YIELD STRENGTH 55,0000 P.S.I. SHAFT INCLUDES A 3"x5" HANDHOLE HANDHOLE FURNISHED WITH COVER.

BASE PLATE: FABRICATED FROM STRUCTURAL QUALITY HOT ROLLED STEEL BASE TELESCOPES AND IS CIRCUMFERENTIALLY WELDED TO SHAFT.

DECORATIVE: TWO PIECE CORROSION RESISTANT, DURABLE CAST ALUMINUM CONSTRUCTION. MINIMUM .225 WALL THICKENESS. BASE CONSISTS OF A WIDE SMOOTH, STEPPED BOTTOM SECTION AND A DECORATIVE TOP SECTION PROVIDED WITH HAND HOLE AND COVER. HAND HOLE COVER SUPPLIED WITH TAMPER RESISTANT HARDWARE. SETS SCREWS PROVIDED TO SECURE BASE TO SHAFT.

ANCHORAGE: (4) 3/4"X24" FULLY GALVANIZED ANCHOR BOLTS. EACH BOLT SUPPLIED WITH TWO NUTS AND TWO WASHERS.

FINISH: ELECTROSTATICALLY APPLIED BAKED ON TEXTURED ACRYLIC ENAMEL. (COLOR DARK GREEN).

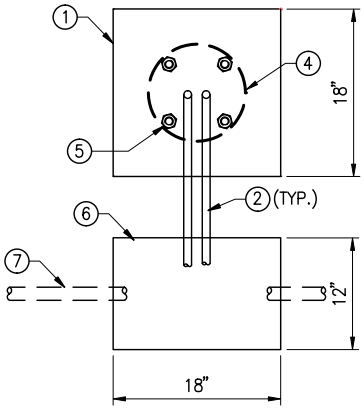

TYP. LIGHT LAYOUT DETAILS

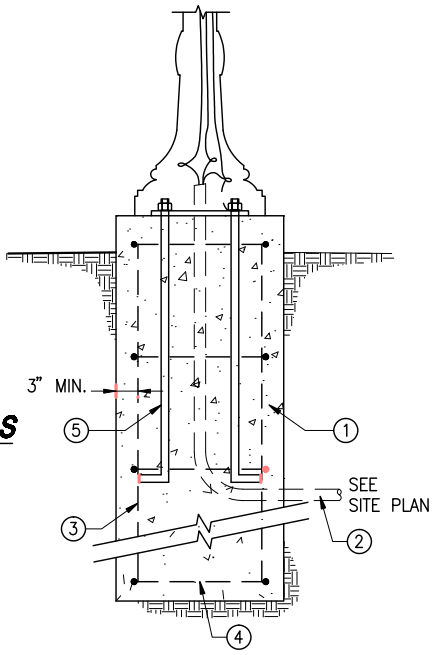

ELECTROLIER FOOTINGS

1. CLASS "A" TYPE CONCRETE, SEE CITY TEHACHAPI STANDARD SPECIFICATION.
2. PVC CONDUIT, 3/4".
3. (5) No. 4 REBAR VERTICAL, 3" CLEAR FROM EDGE OF FOOTING.
4. (4) No. 4 REBAR HORIZONTAL CONTINUOUS AS SHOWN.
5. 3/4"x24" ANCHOR NOLTS PER MANUFACTURER SPECS, (4) PER FOOTING TYPICAL.
6. CHRISTY BOX N9 ELECTRICAL BOX W/ FL9T LID.
7. PVC CONDUIT, SEE SITE PLAN.

DATE	REVISION
11/07	ADDENDUM NO.1

CITY OF TEHACHAPI

STREET LIGHT FOR SPEAKER MOUNTED POLES

BOYLE ENGINEERING CORPORATION

DATE DRAWN	SHEET NO.
10/07	5.20A

DWG: S:\T08_standard details\L1691_5-20A.dwg USER: dghilarducci
DATE: Mar 03, 2008 1:56pm XREFS:

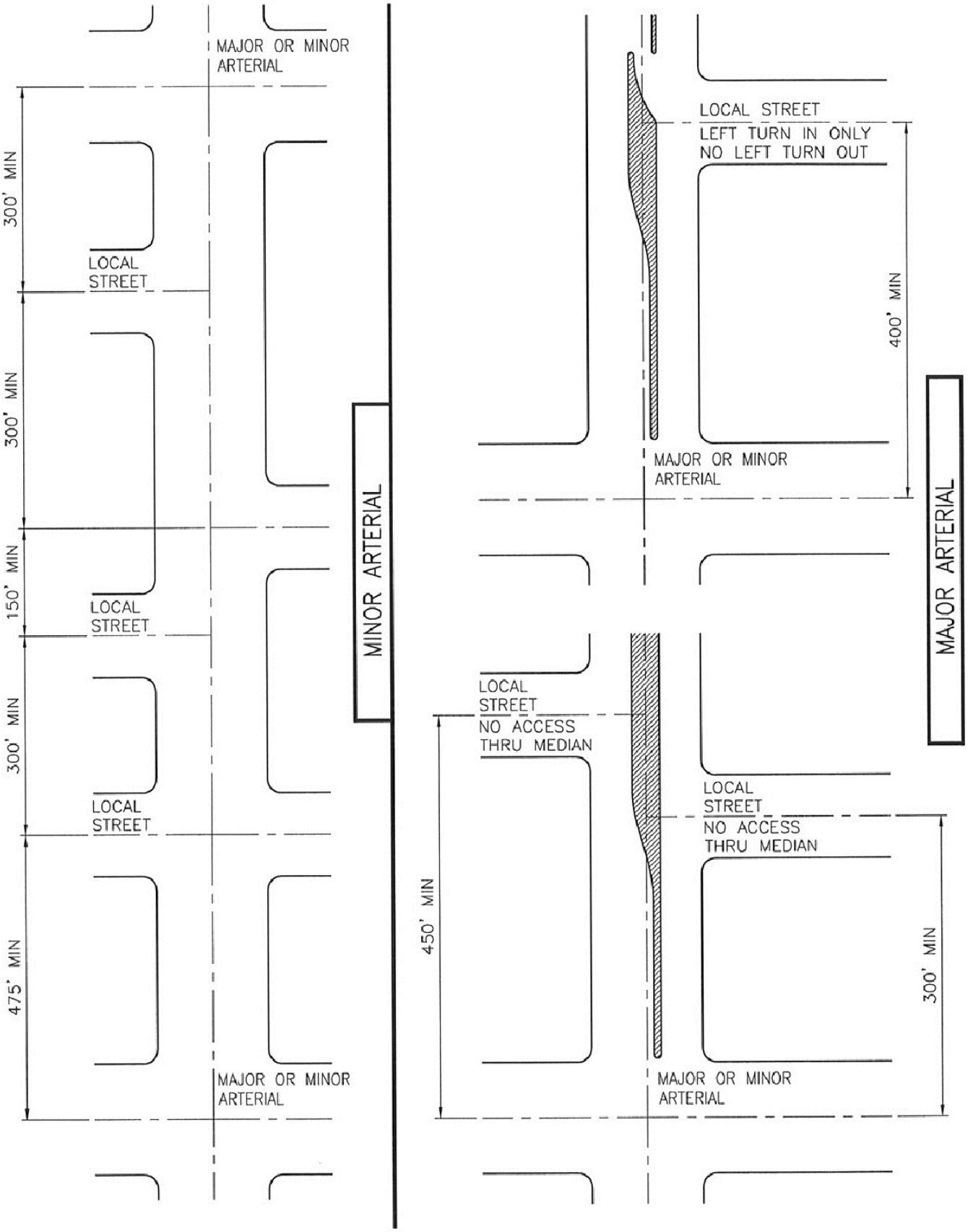

DATE	REVISION

CITY OF TEHACHAPI

STREET ACCESS
SPACING ON MAJOR STREETS

BOYLE ENGINEERING CORPORATION

DATE DRAWN	SHEET NO.
01/06	5.21

DWG: S:\T08_standard details\L1691_5-21.dwg USER: dghiarducci
DATE: Mar 03, 2008 2:22pm XREFS:

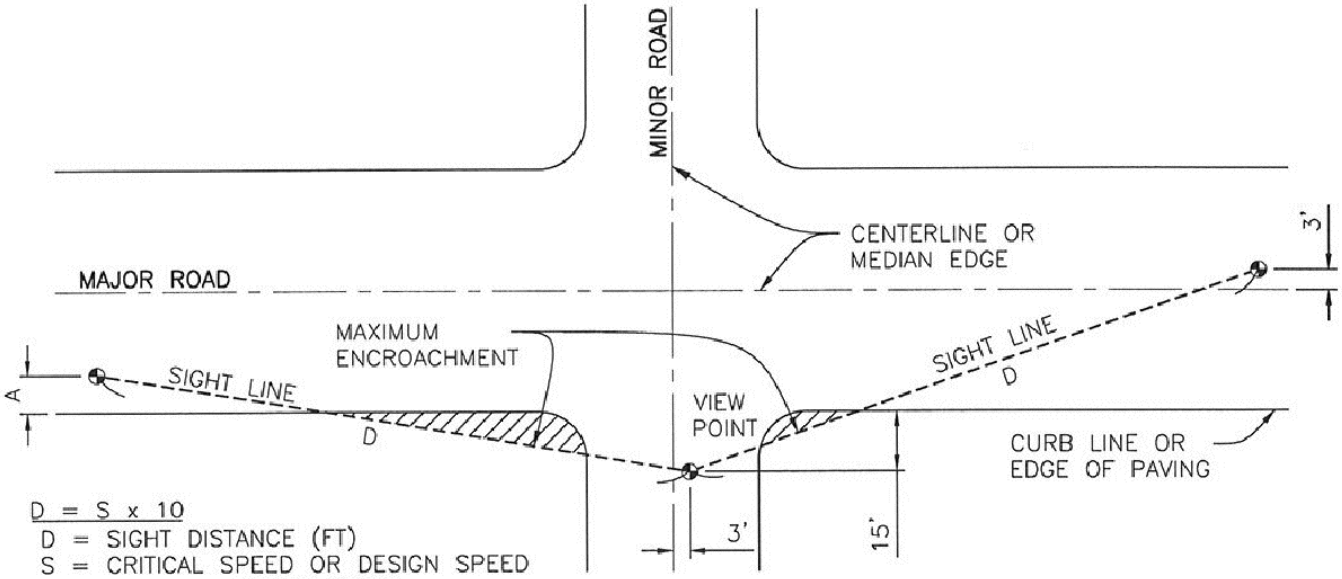

D = S x 10
D = SIGHT DISTANCE (FT)
S = CRITICAL SPEED OR DESIGN SPEED ON THRU STREET (MPH)
A = 12' WITH PARKING
6' WITHOUT PARKING

CONTROLLED INTERSECTION

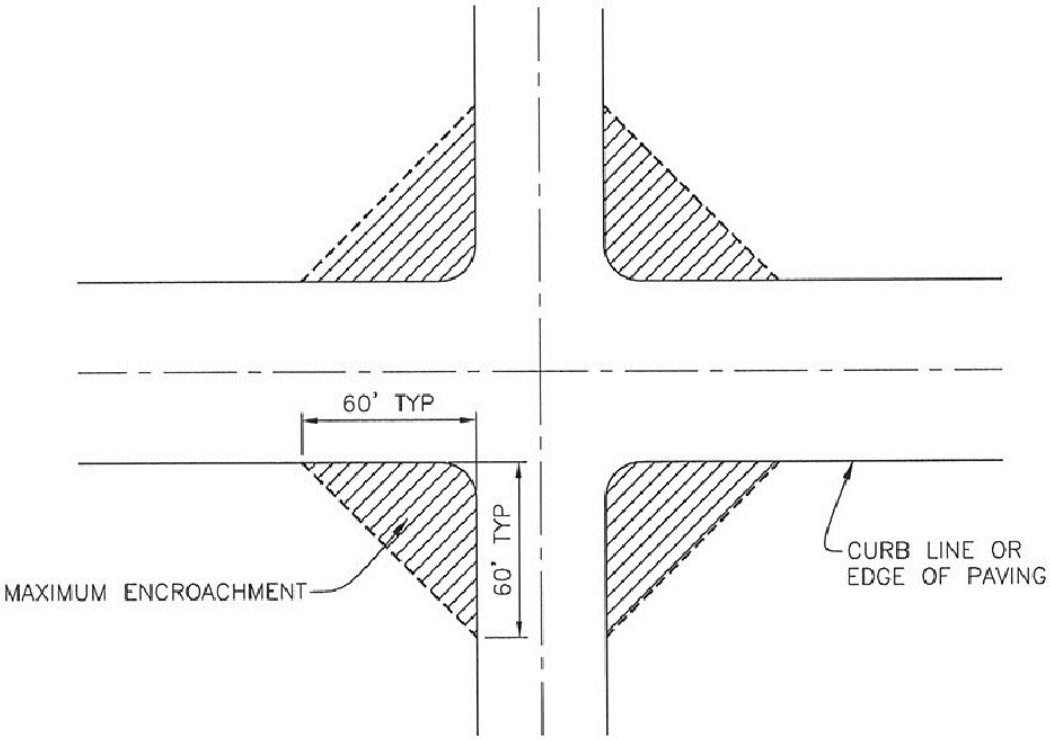

UNCONTROLLED INTERSECTION

GENERAL NOTES:

BOTH CONDITION GOVERN AT UNCONTROLLED TEE INTERSECTIONS

DATE	REVISION

CITY OF TEHACHAPI

LINE OF SIGHT REQ'S FOR INTERSECTIONS

BOYLE ENGINEERING CORPORATION

DATE DRAWN	SHEET NO.
01/06	5.22

DWG: S:\T08_standard details\L1691_5-22.dwg USER: dghilarducci
DATE: Mar 03, 2008 2:24pm XREFS:

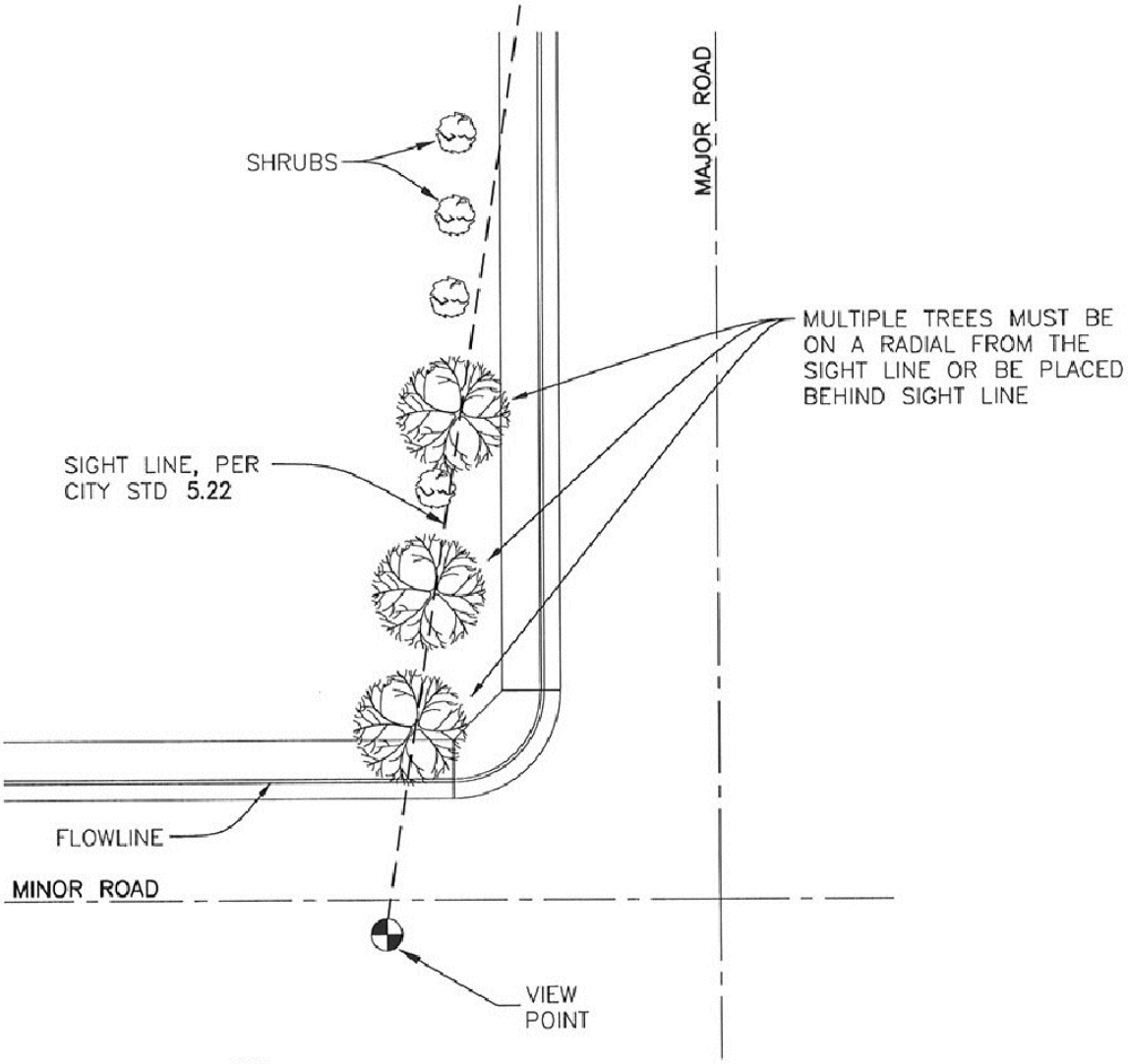

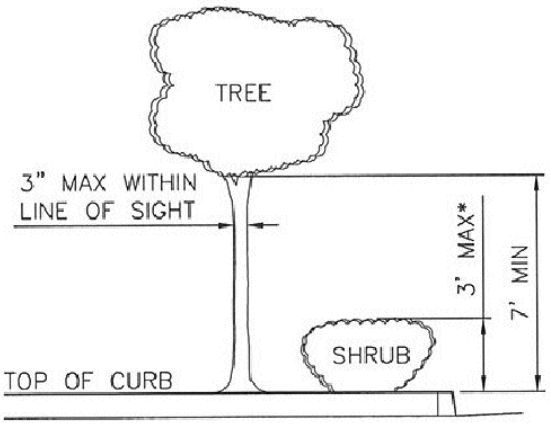

TREES AND SHRUBS WITHIN SIGHT LINE AND TREES OVER SIDEWALKS SHALL CONFORM TO THE DETAIL. SIGHT LINE AND VIEW POINT LOCATION SHALL CONFORM TO THE APPLICABLE SECTION OF THESE STANDARDS AND CITY STANDARD 5.22.

*MEASURE FROM TOP OF CURB FOR SHRUBS OR OTHER LANDSCAPING AS SHOWN.
MEASURE FROM GUTTER FLOWLINE FOR SOLID OBJECTS LIKE FENCES, WALLS, ETC.

DATE	REVISION

CITY OF TEHACHAPI

LINE OF SIGHT REQ'S FOR LANDSCAPING

BOYLE ENGINEERING CORPORATION

DATE DRAWN	SHEET NO.
01/06	5.23

DWG: S:\T08_standard details\L1691_5-23.dwg USER: dghilarducci
DATE: Mar 03, 2008 2:25pm XREFS:

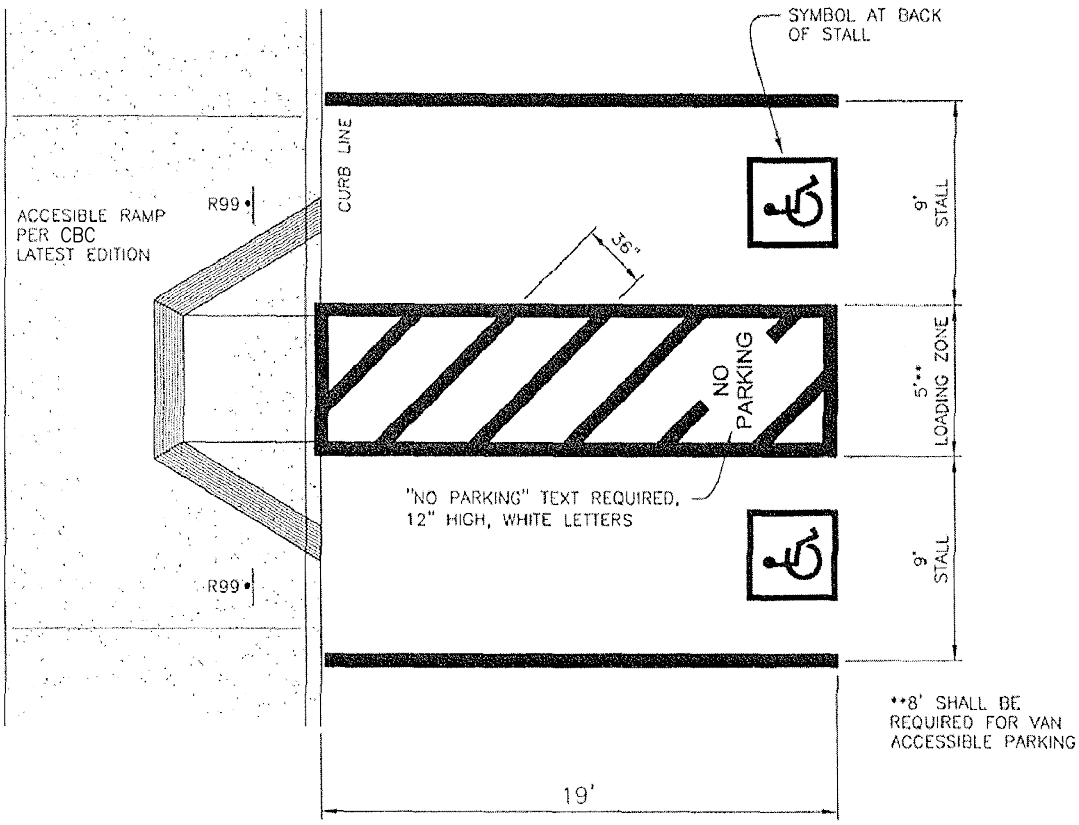

DISABLED PARKING PLAN

GENERAL NOTES:

THE QUANTITY OF ACCESSIBLE SPACES (VAN AND CAR) SHALL BE DETERMINED BY THE CALIFORNIA BUILDING CODE, LATEST EDITION AND / OR BY CITY ORDINANCES.

ALL MARKINGS SHALL BE PAINTED BLUE (UNLESS OTHERWISE INDICATED) WITH PAINT THAT MEETS SECTION 504 OF THE FEDERAL "REHABILATATION ACT OF 1973". PAINT SHALL BE OF COMMERCIAL QUALITY FOR TRAFFIC MARKING PURPOSES AND SHALL BE COLOR #15090 (BLUE) OF THE FEDERAL COLOR STANDARD #595A.

PER SECTION 22511.8(a) OF THE VEHICLE CODE, A HANDICAP SYMBOL SHALL BE PAINTED IN EACH STALL AND A R99 DISABLED PARKING SIGN SHALL BE PLACED AT END OF EACH STALL. IN ADDITION, A SIGN CONFORMING TO SEC. 22511.8 (d) OF THE VEHICLE CODE SHALL BE PLACED EITHER ADJACENT TO SPACE OR AT EACH ENTRANCE TO THE PARKING LOT.

STALLS SHALL BE LOCATED SO NO DISABLED PERSON IS FORCED TO TRAVEL BEHIND VEHICLE OTHER THAN THEIR OWN.

TWO STALLS MAY SHARE A COMMON LOADING AREA.

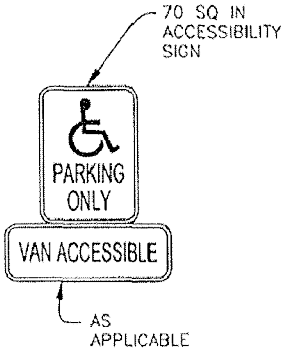

R99 DISABLED PARKING SIGN

DATE	REVISION
11/07	ADDENDUM NO.1

CITY OF TEHACHAPI

DISABLED PARKING REQUIREMENTS

BOYLE ENGINEERING CORPORATION

DATE DRAWN	SHEET NO.
01/06	5.24

DWG: S:\T08_standard details\L1691_5-24.dwg USER: dghilarducci
DATE: Mar 03, 2008 2:15pm XREFS:

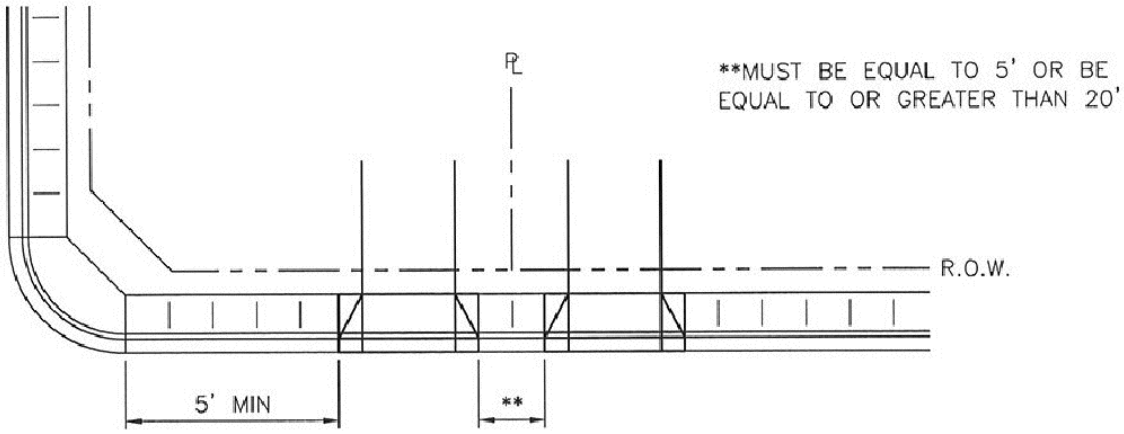

SINGLE FAMILY RESIDENTIAL

THIS STANDARD APPLIES TO SINGLE FAMILY RESIDENTIAL ACCESS FROM LOCAL STREETS. SINGLE FAMILY RESIDENTIAL ACCESS TO MAJOR COLLECTORS OR ARTERIALS IS PROHIBITED UNLESS MADE NECESSARY BY PRIOR PARCELIZATION. FOR SINGLE FAMILY RESIDENTIAL ACCESS FROM ARTERIALS AND COLLECTORS THE 5' DIMENSION FROM THE CORNER SHALL BE INCREASED TO 20'.

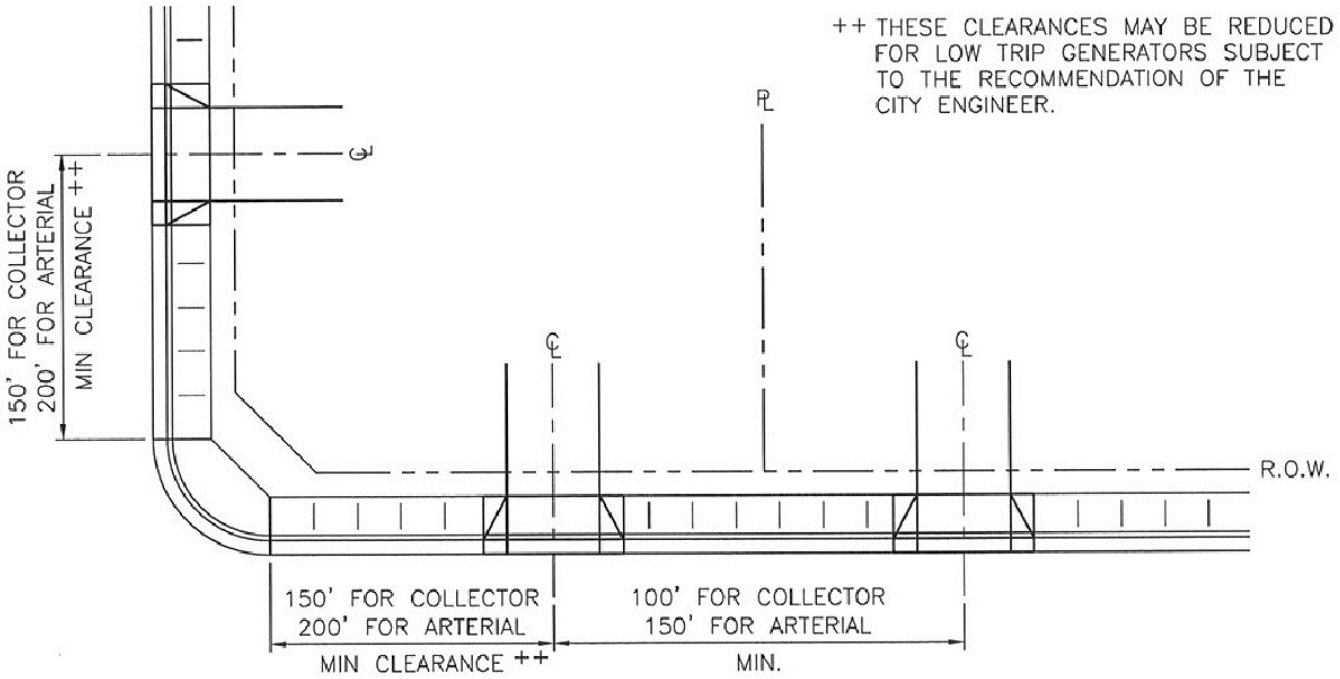

NON SINGLE FAMILY RESIDENTIAL AND COMMERCIAL

THIS STANDARD APPLIES TO ALL TYPES OF ACCESSES, EXCEPT SINGLE FAMILY RESIDENTIAL.

ALL ACCESSES ON MAJOR STREETS SHALL REQUIRE THE APPROVAL OF THE CITY ENGINEER. FOR MAJOR STREETS. THE 150' & 200' DIMENSION FROM THE CORNER MAY REQUIRE ADDITIONAL CLEARANCE FOR LEFT-TURN STORAGE. ACCESSES WILL NOT BE ALLOWED WITHIN TURN LANE TRANSITIONS.

DATE	REVISION

CITY OF TEHACHAPI

DRIVEWAY ACCESS REQUIREMENTS

BOYLE ENGINEERING CORPORATION

DATE DRAWN	SHEET NO.
01/06	5.25

DWG: S:\T08_standard details\L1691_5-25.dwg USER: dghilarducci
DATE: Mar 03, 2008 2:26pm XREFS:

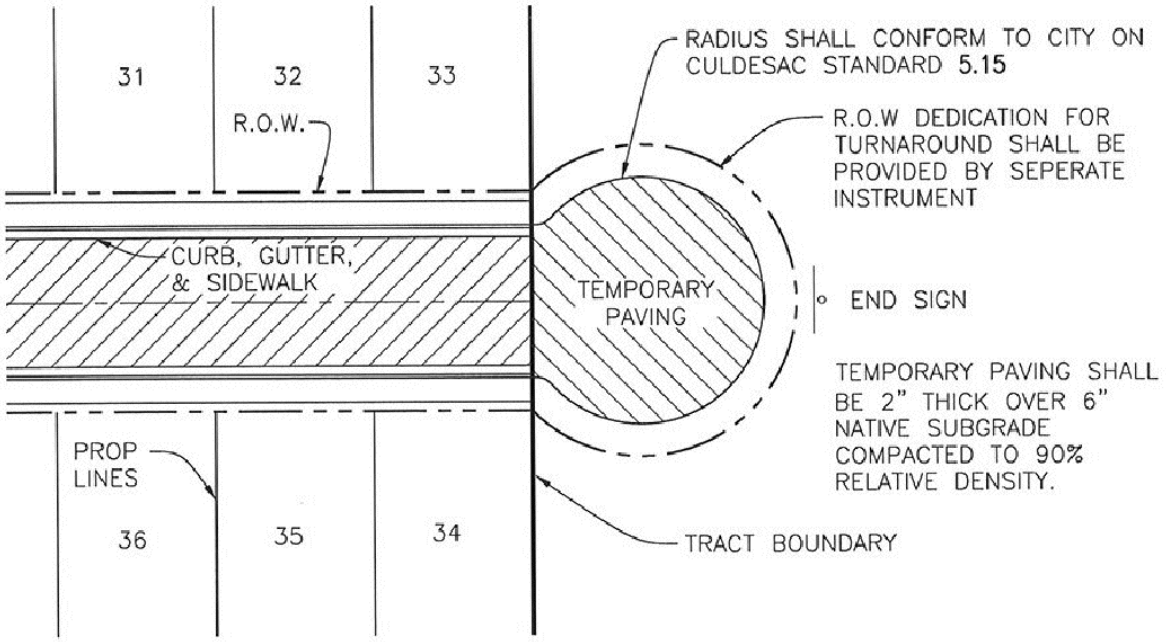

OFF-SIGHT TURNAROUND

REQUIRED AT ENDS OF LONG RUNS WHERE EASEMENTS CAN BE OBTAINED FROM ADJACENT PROPERTY OWNER

DATE	REVISION	CITY OF TEHACHAPI		
		SUBDIVISION TURNAROUND AT FUTURE EXTENSION		
		BOYLE ENGINEERING CORPORATION	DATE DRAWN **01/06**	SHEET NO. **5.26**

DWG: S:\T08_standard details\L1691_5-26.dwg USER: dghilarducci
DATE: Mar 03, 2008 2:28pm XREFS:

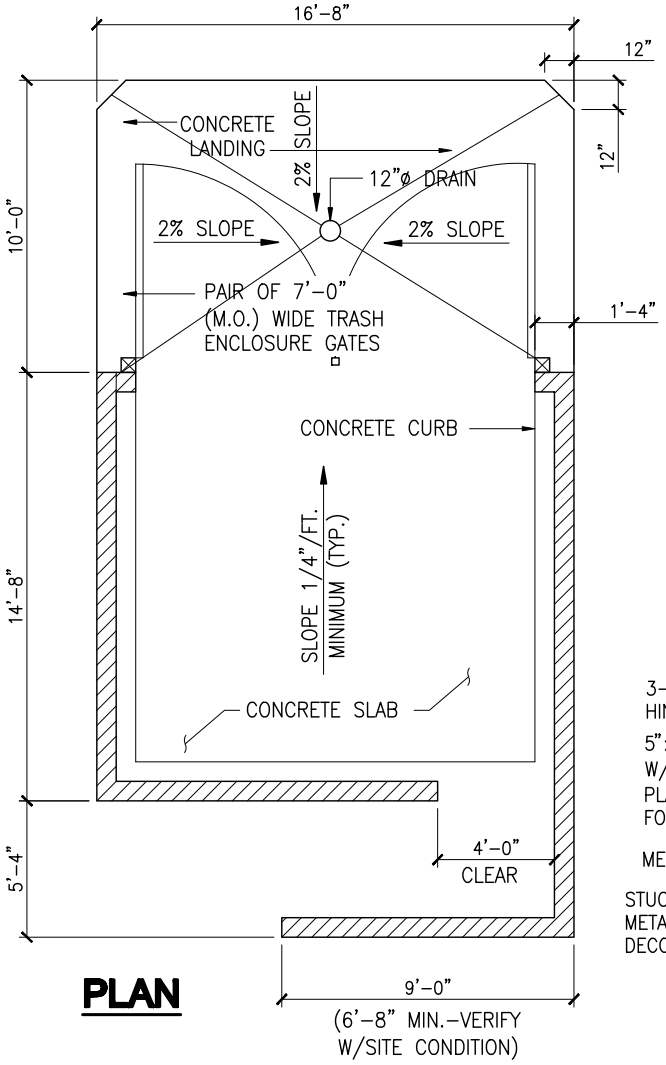

PLAN

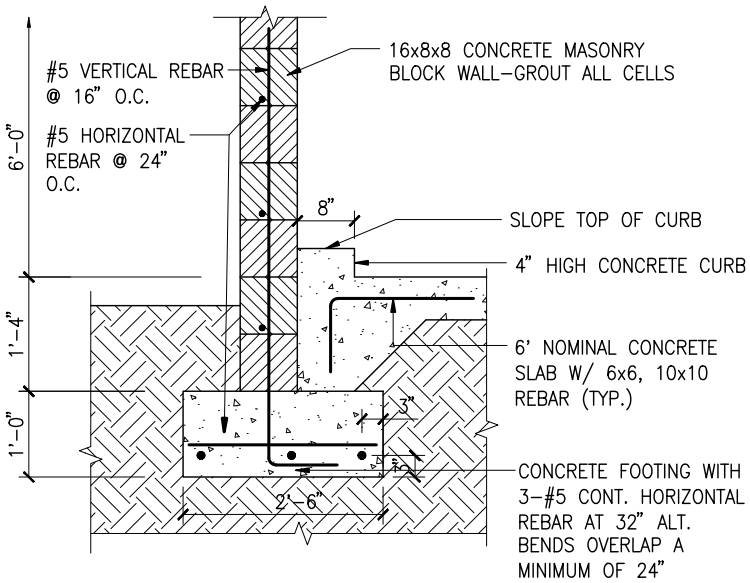

SECTION C

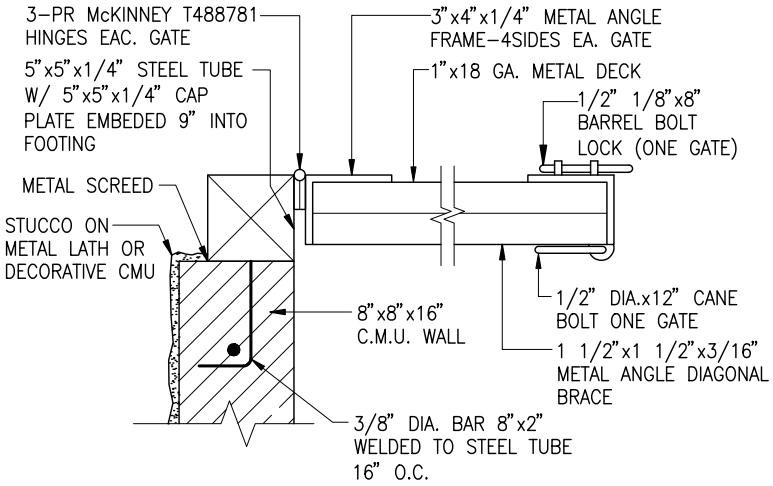

DETAIL 'B'

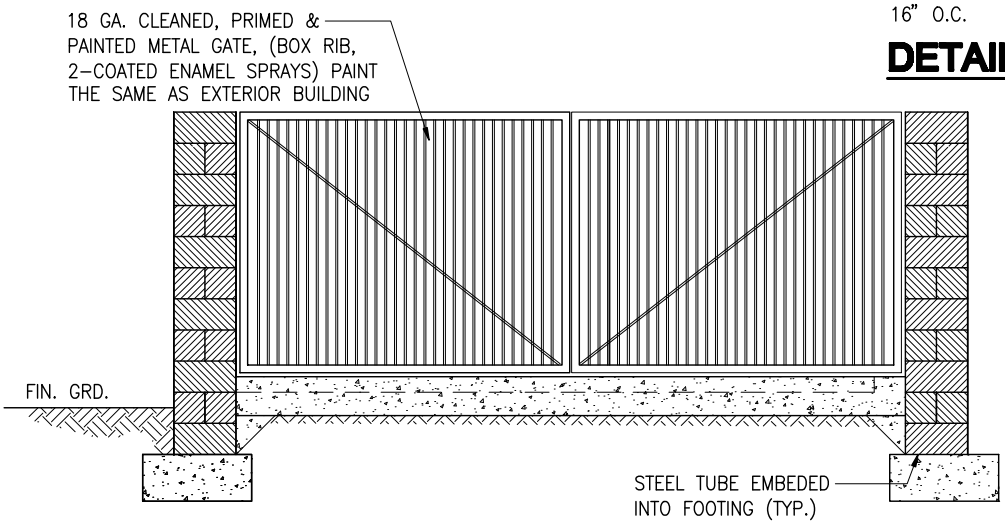

ELEVATION C

		CITY OF TEHACHAPI
		TRASH ENCLOSURE DETAIL
11/07	ADDENDUM NO.1	BOYLE ENGINEERING CORPORATION — DATE DRAWN 10/07 — SHEET NO. 5.27
DATE	REVISION	

DWG: S:\T08_standard details\L1691_5-27.dwg USER: dghilarducci
DATE: Mar 03, 2008 2:15pm XREFS:

PLANT MATERIAL LEGEND

SYMBOL	BOTANICAL NAME	COMMON NAME	SIZE	QUANTITY	REMARKS/COMMENTS

IRRIGATION LEGEND

SYMBOL	QUANTITY	MANUFACT. MODEL	HEAD TYPE	NOZ.	PATTERN	P.S.I.	G.P.M.	RAD/DIA	REMARKS

IRRIGATION EQUIPMENT LEGEND

SYMBOL	MANUFACT. MODEL	DESCRIPTION	SIZE	QUANTITY

DATE	REVISION

CITY OF TEHACHAPI

MATERIAL & PLANT LEGENDS

BOYLE ENGINEERING CORPORATION

DATE DRAWN **01/06**

SHEET NO. **6.1**

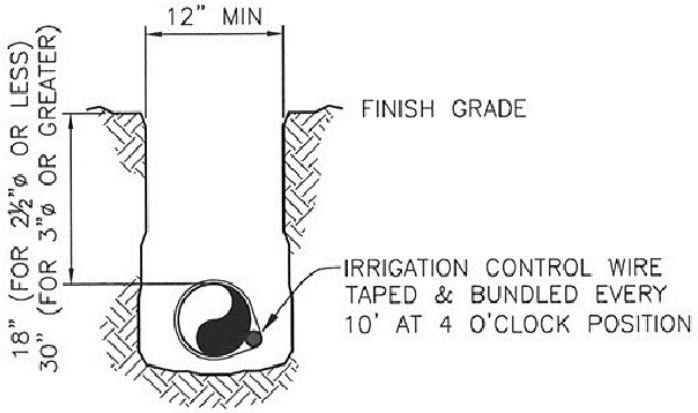

IRRIGATION MAIN

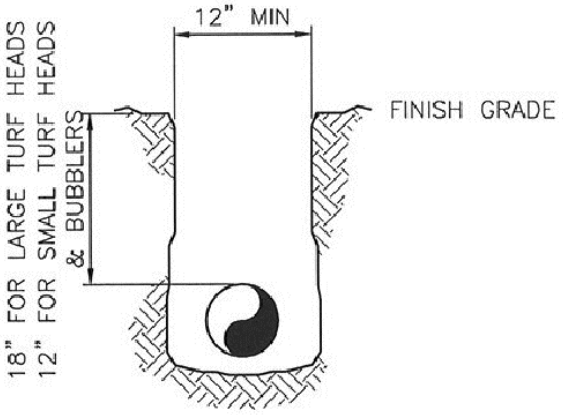

IRRIGATION LATERAL

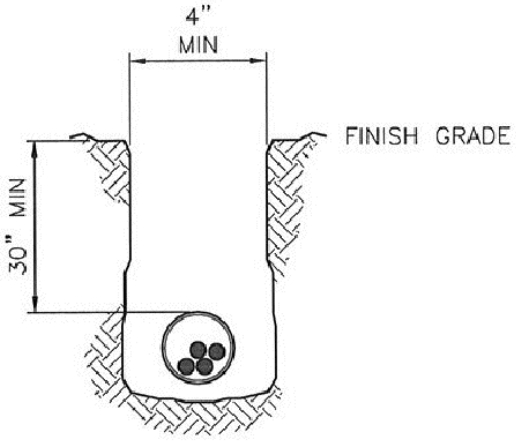

ELECTRICAL CONDUIT

GENERAL NOTES:

ANY AND ALL CHANGES FROM THIS STANDARD DETAIL SHEET SHALL BE APPROVED BY THE CITY ENGINEER PRIOR TO CONSTRUCTION.

ALL LINES PLACED UNDER PAVING OR CONCRETE, INCLUDING CONTROL WIRE, SHALL BE CONTAINED IN A SCHEDULE 40 PVC SLEEVE. PULL BOXES SHALL BE PLACED AT EACH END FOR ELECTRICAL WIRE RUNS.

IF MORE THAN ONE LINE IS INSTALLED PER TRENCH, PROVIDE 6" HORIZONTAL SEPARATION. PARALLEL LINES SHALL NOT BE PLACED OVER ONE ANOTHER.

ALL PRESSURE LINES SHALL BE PRESSURE TESTED TO 150 LBS. FOR TWO HOURS (WITH VALVES INSTALLED) IN THE PRESENCE OF AND AS DIRECTED BY THE CITY ENGINEER.

LANDSCAPE AND IRRIGATION IMPROVEMENTS WITHIN THE DEDICATED STREET RIGHT OF WAY SHALL REQUIRE AN ENCROACHMENT PERMIT.

ALL IRRIGATION MAIN LINES 2½" AND LARGER SHALL BE CLASS 200 RING TITE PVC OR EQUAL APPROVED BY THE CITY ENGINEER. IN ADDITION, THEY SHALL BE SECURED WITH CONCRETE THRUST BLOCKS IN ACCORDANCE WITH MANUFACTURER'S RECOMMENDATION AND AS DIRECTED BY THE CITY ENGINEER.

ALL IRRIGATION MAIN LINES 2" DIA. AND LESS SHALL BE SCH. 40 PVC.

ALL IRRIGATION LATERAL LINES SHALL BE MINIMUM CLASS 200 PVC AND SIZED AS SHOWN ON THE PLANS.

ALL IRRIGATION CONTROL WIRES (CONTROL AND COMMON), SHALL BE 14 GA U.L. SINGLE STRAND COPPER WIRE. TAPE AND NEATLY BUNDLE WIRE TO IRRIGATION MAIN LINE AT A 4 O'CLOCK POSITION.

ALL ELECTRICAL CONDUIT AND WATER LINES SHALL BE 30" DEEP WHEN CROSSING ROADWAYS.

ALL IRRIGATION INSTALLATION SHALL BE IN ACCORDANCE WITH CITY STANDARDS, THE LATEST EDITION OF THE UNIFORM PLUMBING CODE, MANUFACTURER'S RECOMMENDATION, SECTION 20 OF THE STANDARD SPECIFICATIONS, AND AS DIRECTED BY THE CITY ENGINEER.

ALL MATERIALS USED SHALL BE NEW AND FREE FROM DEFECT.

DATE	REVISION

CITY OF TEHACHAPI

PIPING & CONDUIT TRENCHING

BOYLE ENGINEERING CORPORATION

DATE DRAWN	SHEET NO.
01/06	6.2

DWG: S:\T06_standard details\L1691_6-2.dwg USER: dghilarducci
DATE: Mar 03, 2008 2:40pm XREFS: BORDER

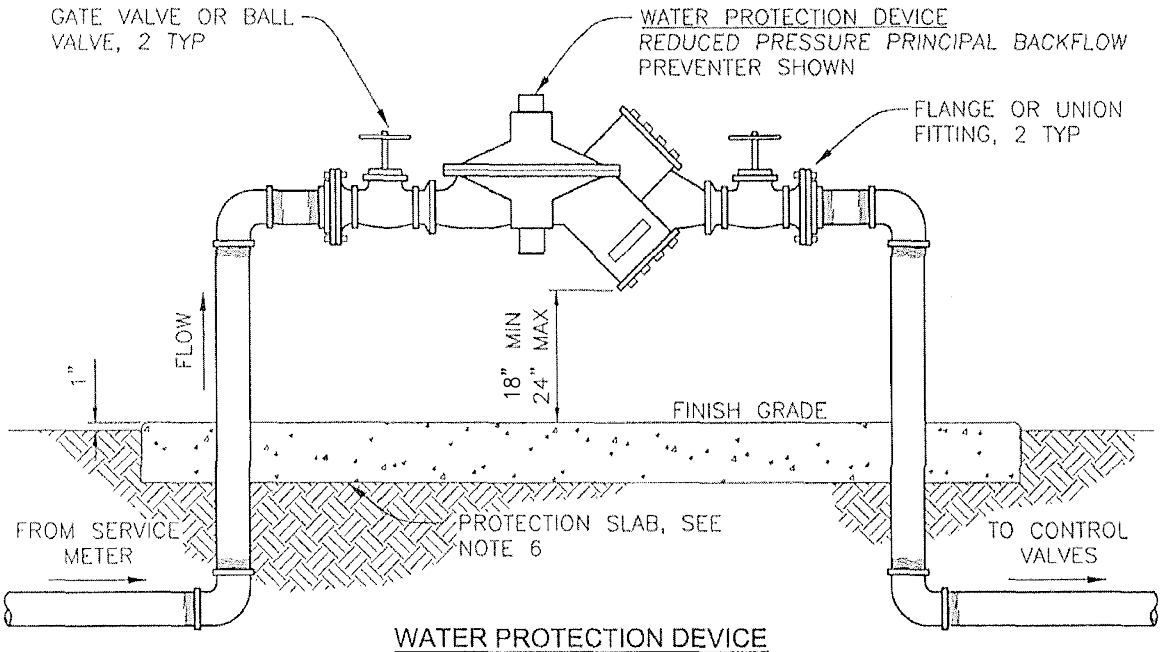

WATER PROTECTION DEVICE
(REDUCED PRESSURE PRINCIPAL TYPE SHOWN)

GENERAL NOTES:

1. ANY AND ALL CHANGES FROM THIS STANDARD DETAIL SHEET SHALL BE APPROVED BY THE CITY ENGINEER PRIOR TO CONSTRUCTION.

2. USE TEFLON PIPE TAPE ON ALL THREADED JOINTS OR APPROVED EQUAL BY THE CITY ENGINEER.

3. ALL MATERIALS USED SHALL BE NEW AND FREE FROM DEFECTS.

4. SEE APPROVED LANDSCAPE AND IRRIGATION PLANS FOR SPECIFIC MODEL NO., SIZE, QUANTITY, MANUFACTURER, AND PERFORMANCE OF THE VARIOUS ITEMS.

5. ALL TRANSITIONS FROM METAL PIPE TO P.V.C. PIPE SHALL BE CONSTRUCTED WITH SCH. 80 FEMALE ADAPTER OR APPROVED EQUAL BY THE CITY ENGINEER.

6. A 6" THICK CLASS "B" CONCRETE SLAB IS REQUIRED FOR ALL WATER PROTECTION DEVICES INSTALLED IN LAWN AREAS. MINIMUM CLEARANCE SHALL BE 18" ON ALL SIDES OF THE DEVICE OR ITS ENCLOSURE AND AS DIRECTED BY THE CITY ENGINEER.

7. ALL IRRIGATION INSTALLATIONS SHALL BE IN ACCORDANCE WITH CITY STANDARDS, THE LATEST EDITION OF THE UNIFORM PLUMBING CODE, MANUFACTURER'S RECOMMENDATION, SECTION 20 OF THE STANDARD SPECIFICATIONS, AND AS DIRECTED BY THE CITY ENGINEER.

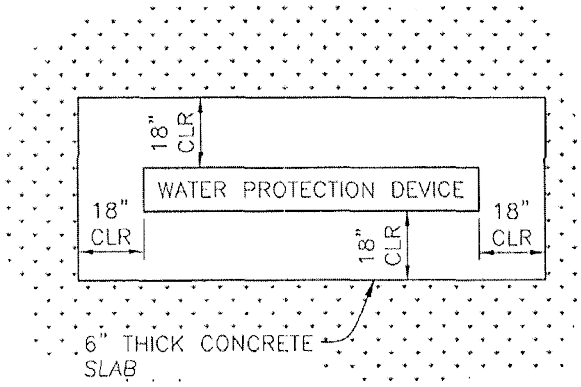

PROTECTION SLAB

8. ALL PIPING AND FITTINGS ABOVE GROUND SHALL BE GALVANIZED SCHED. 40, UNLESS NOTED OTHERWISE.

9. BACKFLOW PREVENTERS SHALL BE INSTALLED & TESTED IN PLACE BY APPROVED TESTER PRIOR TO BEING PLACED INTO PERMANENT OPERATION.

10. PROVIDE BACKFLOW PREVENTION DEVICE WITH A VANDAL & WEATHER RESISTANT ENCLOSURE. ENCLOSURE SHALL BE AS DESCRIBED IN THE STANDARD SPECIFICATIONS OR AS APPROVED BY THE CITY ENGINEER.

DATE	REVISION
11/07	ADDENDUM NO.1

CITY OF TEHACHAPI

WATER PROTECTION DEVICE (BACKFLOW PREVENTION)

BOYLE ENGINEERING CORPORATION

DATE DRAWN	SHEET NO.
01/06	6.3

DWG: S:\T06_standard details\L1691_6-3.dwg USER: dghilarducci
DATE: Mar 03, 2008 2:41pm XREFS: BORDER

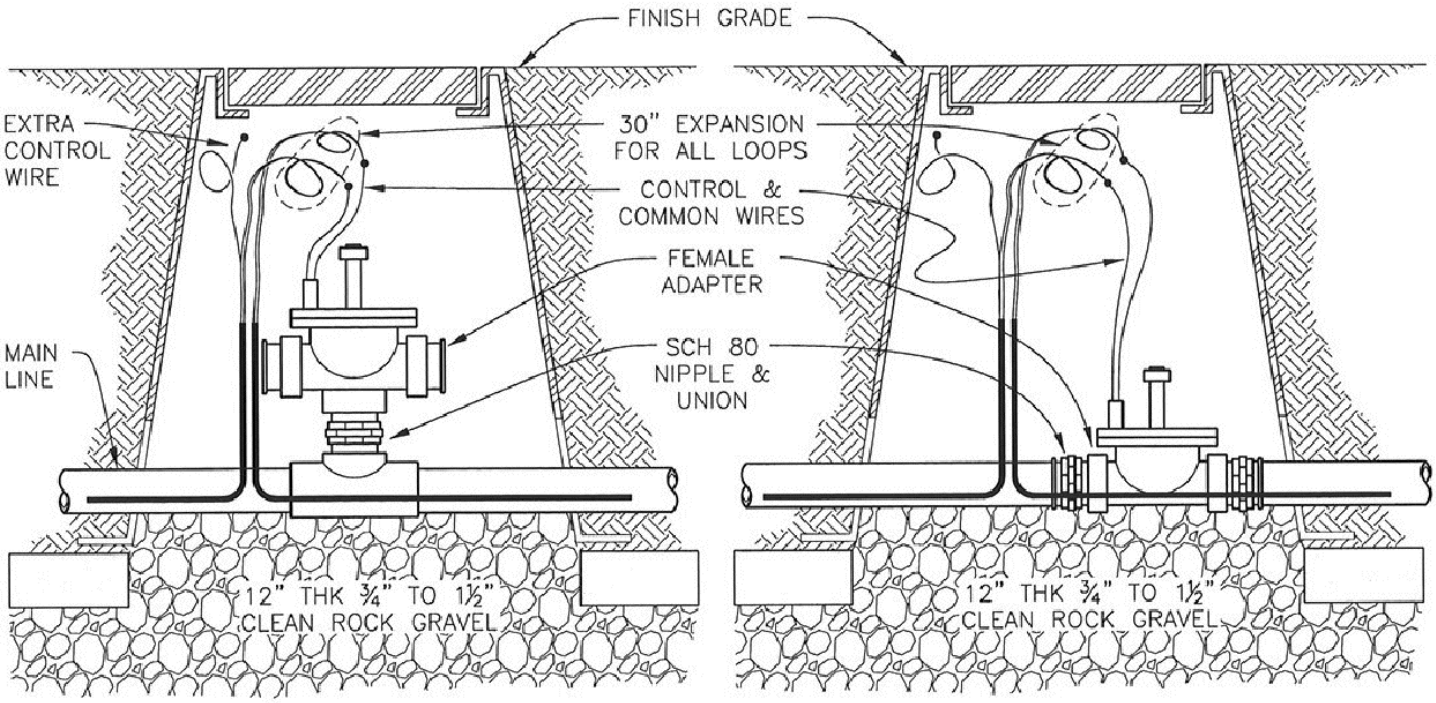

REMOTE CONTROL VALVE
(FOR VALVES SIZED 2½" AND LARGER)

REMOTE CONTROL VALVE
(FOR VALVES SIZED ½" TO 2")

GENERAL NOTES:

ANY AND ALL CHANGES FROM THIS STANDARD DETAIL SHEET SHALL BE APPROVED BY THE CITY ENGINEER PRIOR TO CONSTRUCTION.

USE TEFLON PIPE TAPE ON ALL THREADED JOINTS.

ALL NIPPLES SHALL BE SCH. 80 P.V.C.

ALL FITTINGS SHALL BE SCH. 40 P.V.C.

ALL IRRIGATION CONTROL VALVES SHALL BE PLACED IN A PLASTIC IRRIGATION CONTROL VALVE BOX WITH TOP OF VALVE BOX UNIFORM WITH SURROUNDING GRADE. THE FOLLOWING PLASTIC VALVE BOXES AND LIDS ARE ACCEPTABLE OR APPROVED EQUAL BY THE CITY ENGINEER:

AMETEK #10-173-134-LID
AMETEK #10-170-001-BOX
BROOK #1419 "SNAP LOCK" TAB LID
BROOK #1419 BODY BOX

INSTALLATION OF EXTRA IRRIGATION CONTROL WIRE FROM IRRIGATION CONTROL CLOCK TO REMOTE CONTROL VALVES IS REQUIRED FOR EACH REMOTE CONTROL VALVE.

ALL IRRIGATION CONTROL WIRES (CONTROL AND COMMON), SHALL BE 14 GA U.L. SINGLE STRAND COPPER WIRE. TAPE AND NEATLY BUNDLE WIRE TO IRRIGATION MAIN LINE AT A 4 O'CLOCK POSITION.

ALL WIRE CONNECTIONS SHALL BE WATERPROOF AND CONSTRUCTED WITH MOD. #57-03 SNAP-TITE WIRE CONNECTORS AND PT-55 SEALER OR APPROVED EQUAL BY THE CITY ENGINEER.

MAINTAIN 24" SEPARATION BETWEEN REMOTE CONTROL VALVES (CENTERLINE TO CENTERLINE) WHEN MORE THAN ONE VALVE IS INSTALLED IN SAME LOCATION.

ALL IRRIGATION INSTALLATIONS SHALL BE IN ACCORDANCE WITH CITY STANDARDS, THE LATEST EDITION OF THE UNIFORM PLUMBING CODE, MANUFACTURER'S RECOMMENDATION, SECTION 20 OF THE STANDARD SPECIFICATIONS, AND AS DIRECTED BY THE CITY ENGINEER.

ALL MATERIALS USED SHALL BE NEW AND FREE FROM DEFECTS.

SEE APPROVED LANDSCAPE AND IRRIGATION PLANS FOR SPECIFIC MODEL NO., SIZE, QUANTITY, MANUFACTURERS AND PERFORMANCE OF THE VARIOUS ITEMS.

DATE	REVISION

CITY OF TEHACHAPI

REMOTE CONTROL VALVES

BOYLE ENGINEERING CORPORATION

DATE DRAWN	SHEET NO.
01/06	6.4

DWG: S:\T08_standard details\L1691_6-4.dwg USER: dghilarducci
DATE: Mar 03, 2008 2:42pm XREFS: BORDER

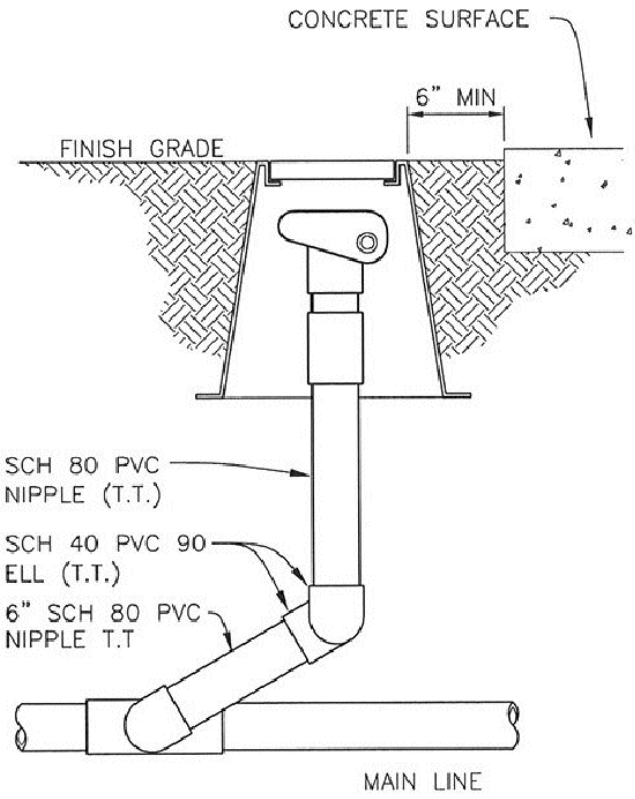

QUICK COUPLER
(IN VALVE BOX)

GENERAL NOTES:

ANY AND ALL CHANGES FROM THIS STANDARD DETAIL SHEET SHALL BE APPROVED BY THE CITY ENGINEER PRIOR TO CONSTRUCTION.

USE TEFLON PIPE TAPE ON ALL THREADED JOINTS.

QUICK COUPLER VALVES SHALL BE RAIN BIRD #33 Or #44 LVC (LOCKING VINYL COVER) WITH KEY PER EACH VALVE OR APPROVED EQUAL BY ENGINEER.

ALL QUICK COUPLERS SHALL BE PLACED IN A PLASTIC IRRIGATION CONTROL VALVE BOX WITH TOP OF VALVE BOX UNIFORM WITH SURROUNDING GRADE. THE FOLLOWING PLASTIC VALVE BOXES AND LIDS ARE ACCEPTABLE OR APPROVED EQUAL BY THE CITY ENGINEER:

AMETEK #10-173-134-LID
AMETEK #10-170-001-BOX
BROOK #1419 "SNAP LOCK" TAB LID
BROOK #1419 BODY BOX

ALL IRRIGATION INSTALLATIONS SHALL BE IN ACCORDANCE WITH CITY STANDARDS, THE LATEST EDITION OF THE UNIFORM PLUMBING CODE, MANUFACTURER'S RECOMMENDATION, SECTION 20 OF THE STANDARD SPECIFICATIONS, AND AS DIRECTED BY THE CITY ENGINEER.

ALL MATERIALS USED SHALL BE NEW AND FREE FROM DEFECTS.

SEE APPROVED LANDSCAPE AND IRRIGATION PLANS FOR SPECIFIC MODEL NO., SIZE, QUANTITY, MANUFACTURERS AND PERFORMANCE OF THE VARIOUS ITEMS.

DATE	REVISION

CITY OF TEHACHAPI

QUICK COUPLERS

BOYLE ENGINEERING CORPORATION

DATE DRAWN	SHEET NO.
01/06	6.5

DWG: S:\T08_standard details\L1691_6-5.dwg USER: dghilarducci
DATE: Mar 03, 2008 2:43pm XREFS: BORDER

GENERAL NOTES:

ANY AND ALL CHANGES FROM THIS STANDARD DETAIL SHEET SHALL BE APPROVED BY THE CITY ENGINEER PRIOR TO CONSTRUCTION.

GALVANIZED CONDUIT SHALL BE REQUIRED WHEN CONDUIT IS ABOVE GROUND AND EXPOSED TO ELEMENTS.

CONSTRUCT 6" CLASS "B" CONCRETE SLAB AS REQUIRED TO RECEIVE THE VANDAL RESISTANT ENCLOSURE. IRRIGATION CONTROL CLOCK TO BE MOUNTED WITHIN. MOUNT PEDISTAL TO CONCRETE SLAB PER MANUFACTURERS REQUIREMENTS WITH A MINIMUM OF FOUR "J" ANCHORS.

AREA AROUND BASE OF MOUNTED IRRIGATION CONTROL CLOCK CAN EITHER BE PLANTED, HARDSURFACE OR A COMBINATION. TOP OF BASE SHALL BE 1/2" ABOVE GRADE FOR LAWN AND 1" ABOVE GRADE FOR GROUND COVER OR SHRUBS.

ALL IRRIGATION INSTALLATIONS SHALL BE IN ACCORDANCE WITH CITY STANDARDS, THE LATEST EDITION OF THE UNIFORM PLUMBING CODE, MANUFACURER'S RECOMMENDATION, AND AS DIRECTED BY THE CITY ENGINEER

ALL MATERIAL USED SHALL BE NEW AND FREE FROM DEFECTS.

SEE APPROVED LANDSCAPE AND IRRIGATION PLANS FOR SPECIFIC MODEL NO., SIZE, QUANTITY, MANUFACTURERS AND PERFORMANCE OF THE VARIOUS ITEMS.

THE ELECTRIC CODE MAY REQUIRE AN INCREASED DISTANCE FOR SOME ENCLOSURES.

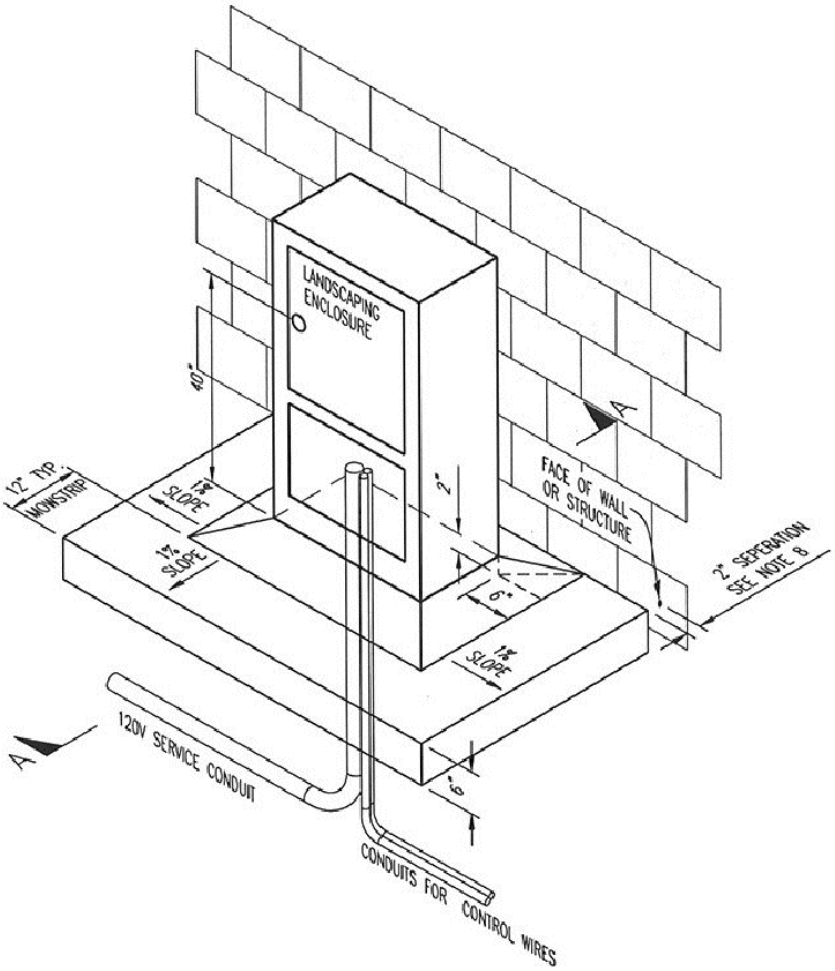

VANDAL RESISTANT ENCLOSURE FOR ELECTRIC METER AND/OR IRRIGATION CONTROL CLOCK

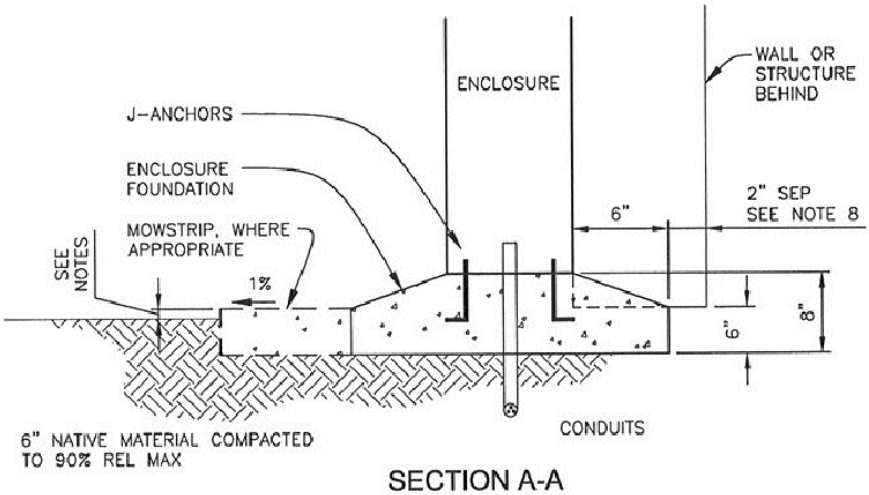

SECTION A-A

DATE	REVISION

CITY OF TEHACHAPI

IRRIGATION CONTROLS & ENCLOSURE

BOYLE ENGINEERING CORPORATION

DATE DRAWN	SHEET NO.
01/06	6.6

DWG: S:\T08_standard details\L1691_6-6.dwg USER: dghilarducci
DATE: Mar 03, 2008 2:47pm XREFS: BORDER

GENERAL NOTES

ANY AND ALL CHANGES FROM THIS STANDARD DETAIL SHEET SHALL BE APPROVED BY THE CITY ENGINEER PRIOR TO CONSTRUCTION.

ALL RISERS AND NIPPLES SHALL BE SCH. 80 P.V.C. SIZED AS REQUIRED.

ALL FITTINGS SHALL BE SCH. 40 P.V.C. SIZED AS REQUIRED.

WHERE IRRIGATION HEADS ARE INSTALLED WITHIN EMBANKMENTS, A DRAIN VALVE OR CHECK VALVE IS REQUIRED TO PREVENT ERROSION. CHECK VALVES AND DRAIN VALVES SHALL BE INSTALLED AT LOCATIONS AS PRESCRIBED BY THE SPECIFIC FIELD CONDITIONS AND SHALL BE APPROVED BY THE CITY ENGINEER PRIOR TO USE AND PLACEMENT.

ALL POP UP HEADS SHALL BE 1" (MIN.) FROM CONCRETE AND ASPHALT AREAS. ALL LARGE RADIUS IRRIGATION HEADS (PART CIRCLE) SHALL BE 4" (MIN.) FROM CONCRETE AND ASPHALT AREAS.

WHERE PART CIRCLE IRRIGATION HEADS ARE ADJACENT TO A BUILDING WALL, LOCATE IRRIGATION HEAD 12" FROM FACE OF BUILDING WALL TO BACK OF IRRIGATION HEAD.

ALL IRRIGATION INSTALLATIONS SHALL BE IN ACCORDANCE WITH CITY STANDARDS, THE LATEST EDITION OF THE UNIFORM PLUMBING CODE, MANUFACTURER'S RECOMMENDATION, SECTION 20 OF THE STANDARD SPECIFICATIONS, AND AS DIRECTED BY THE CITY ENGINEER.

USE TEFLON PIPE TAPE ON ALL THREADED JOINTS OR APPROVED EQUAL BY THE CITY ENGINEER.

ALL MATERIALS USED SHALL BE NEW AND FREE FROM DEFECTS.

SEE APPROVED LANDSCAPE AND IRRIGATION PLANS FOR SPECIFIC MODEL NO., SIZE, QUANTITY, MANUFACTURERS AND PERFORMANCE OF THE VARIOUS ITEMS.

HEIGHT OF POP-UPS SHALL BE 6" FOR TURF OR GRASS AND 12" FOR LANDSCAPED AREAS.

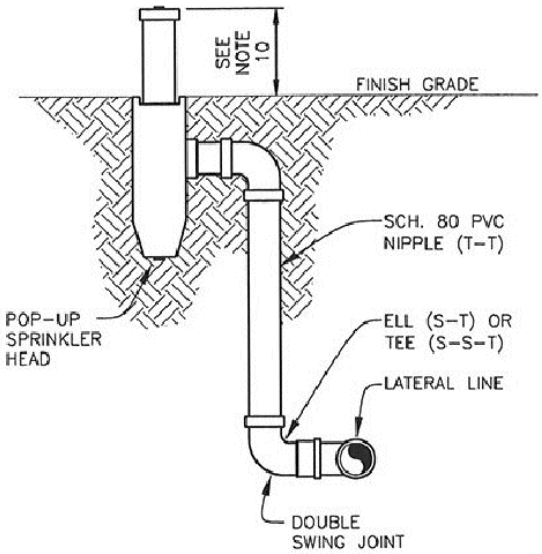

POP UP SPRAY HEAD
(IN VALVE BOX)

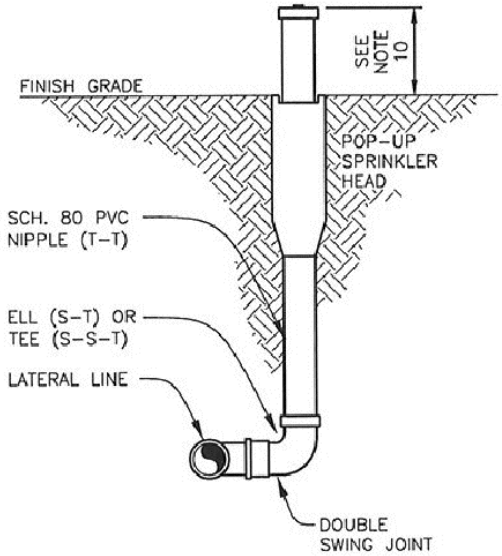

POP UP SPRAY HEAD
(BOTTOM MOUNTED)

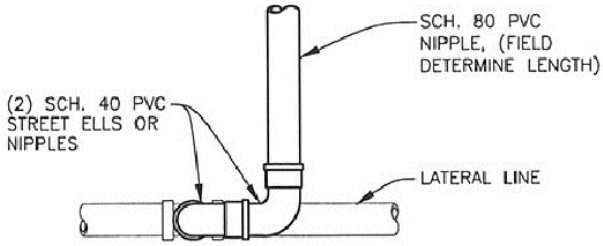

SIDE VIEW

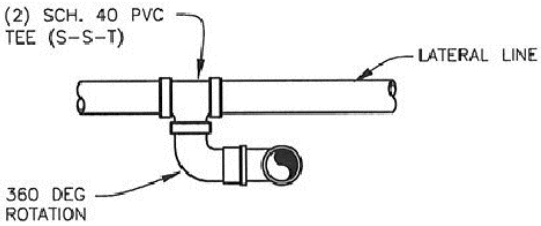

PLAN VIEW

DOUBLE SWING JOINT ASSEMBLY

DATE	REVISION

CITY OF TEHACHAPI

POP UP SPRAY HEADS
DOUBLE SWING JOINTS

BOYLE ENGINEERING CORPORATION

DATE DRAWN	SHEET NO.
01/06	6.7

DWG: S:\T08_standard details\L1691_6-7.dwg USER: dghilarducci
DATE: Mar 03, 2008 2:45pm XREFS: BORDER

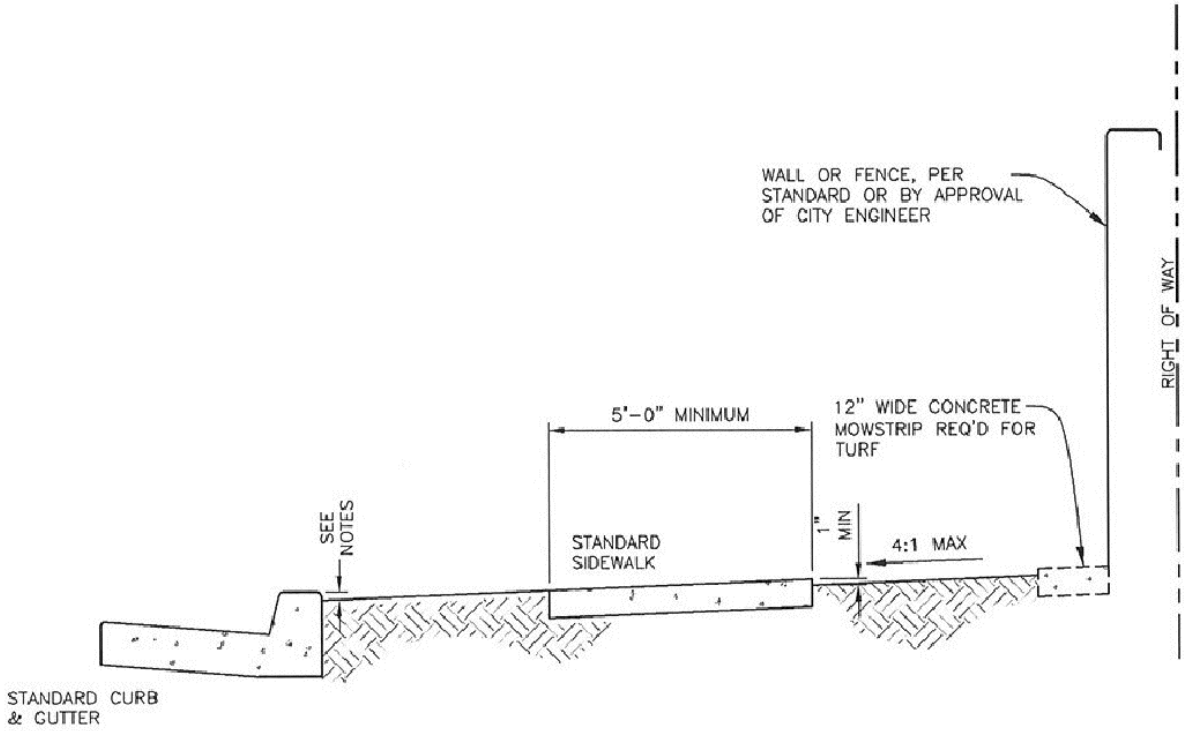

LANDSCAPED AREA

GENERAL NOTES

ANY AND ALL CHANGES FROM THIS STANDARD DETAIL SHEET SHALL BE APPROVED BY THE CITY ENGINEER PRIOR TO CONSTRUCTION.

PROVIDE POSITIVE DRAINAGE IN ALL LANDSCAPE AREAS.

ROOT GUARD BARRIER IS REQUIRED. INSTALL ROOT GUARD BARRIER AS SPECIFIED IN THE APPROVED LANDSCAPE AND IRRIGATION PLANS AND AS DIRECTED BY THE CITY ENGINEER. ALL ROOT GUARD MATERIALS SHALL COMPLY WITH A.S.T.M. D-256, D-638, D-648 AND D-790 AND AS DIRECTED BY THE CITY ENGINEER.

ALL LANDSCAPED AREAS SHALL BE STERILIZED PRIOR TO PLANTING PREPARATION. THE CHEMICALS USED SHALL BE IN ACCORDANCE WITH THE LICENSED PEST CONTROL ADVISOR'S RECOMMENDATION AND APPLIED BY A LICENSED PEST CONTROL APPLICATOR.

CONCRETE MOW STRIP IS REQUIRED FOR ALL LAWN AREAS ADJACENT TO PROPOSED OR EXISTING WALL.

ALL IRRIGATION INSTALLATIONS SHALL BE IN ACCORDANCE WITH STANDARDS, THE LATEST EDITION OF THE UNIFORM PLUMBING CODE, MANUFACTURER'S RECOMMENDATION, SECTION 20 OF THE STANDARD SPECIFICATIONS, AND AS DIRECTED BY THE CITY ENGINEER.

ALL MATERIALS USED SHALL BE NEW AND FREE OF DEFECTS.

SEE APPROVED LANDSCAPE AND IRRIGATION PLANS FOR SPECIFIC MODEL NO., SIZE, QUANTITY, MANUFACTURERS AND PERFORMANCE OF THE VARIOUS ITEMS.

MEANDERING SIDEWALK MAY BE APPROVED BY THE DIRECTOR WITHIN THE PARKWAY AREA WHERE LANDSCAPING IS PROVIDED.

WHERE ADDITIONAL RIGHT OF WAY IS REQUIRED FOR LANDSCAPING, A DEDICATED LANDSCAPING EASEMENT SHALL BE GRANTED TO THE CITY PRIOR TO APPROVAL OF PLANS.

DATE	REVISION

CITY OF TEHACHAPI

LANDSCAPED AREAS ON DEDICATED STREETS

BOYLE ENGINEERING CORPORATION

DATE DRAWN	SHEET NO.
01/06	6.8

DWG: S:\T08_standard details\L1691_6-8.dwg USER: dghilarducci
DATE: Mar 03, 2008 2:44pm XREFS: BORDER

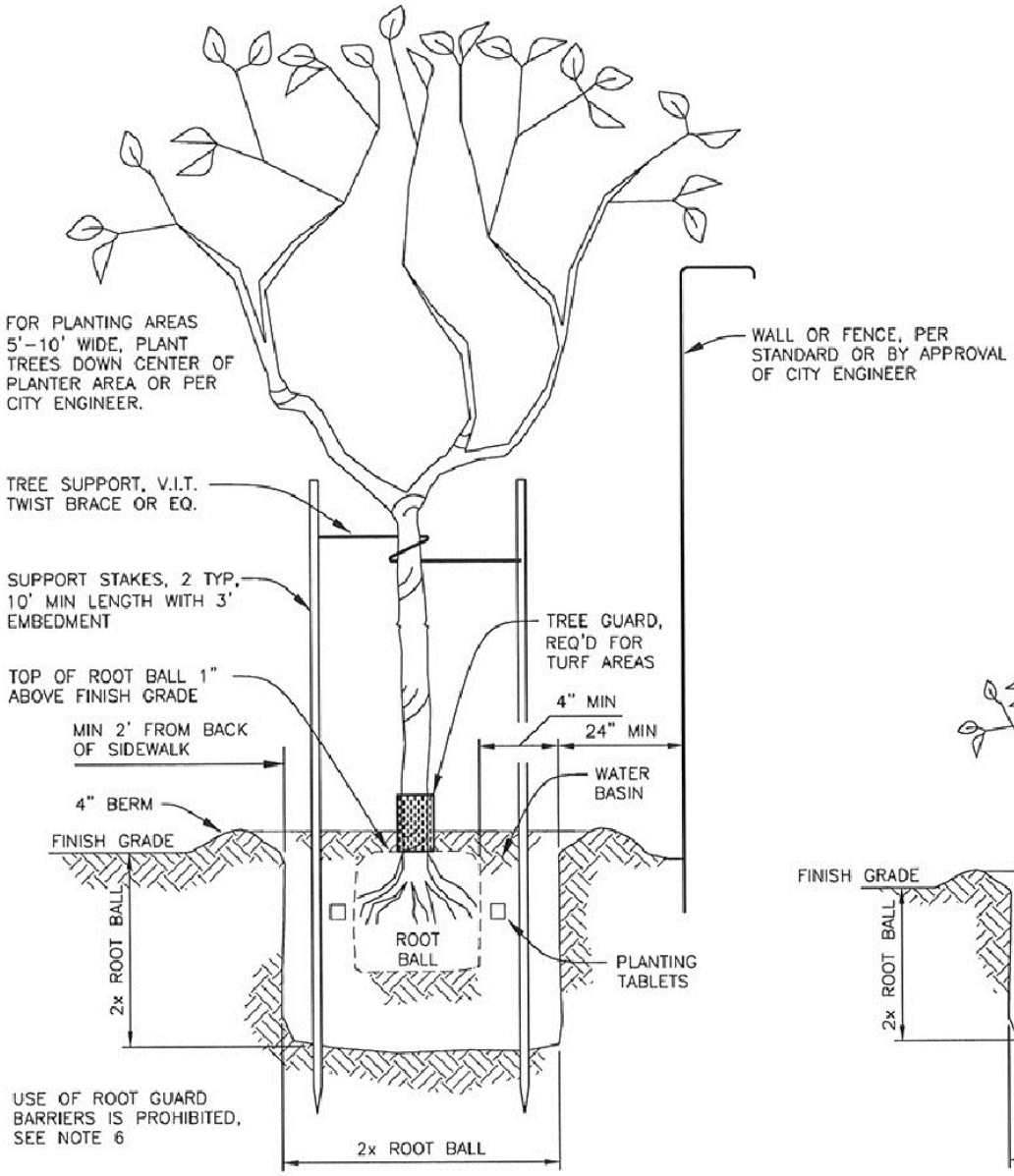

TREE PLANTING DETAIL

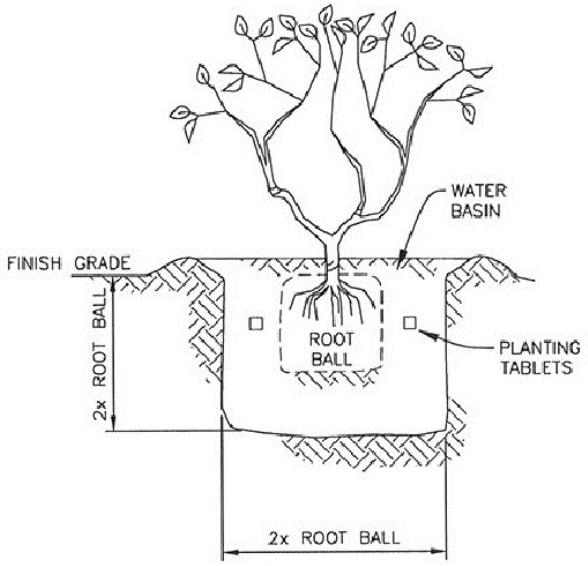

SHRUB PLANTING DETAIL

GENERAL NOTES:

ANY AND ALL CHANGES FROM THIS STANDARD DETAIL SHEET SHALL BE APPROVED BY THE ENGINEER PRIOR TO CONSTRUCTION.

APPLY SOIL AMENDMENT AS PER SOIL TEST.

ALL TREES SHALL BE STAKED WITH 2" OR 3" DIAMETER (PRESSURE TREATED) LODGE POLE PINE. DO NOT DRIVE TREE STAKES THROUGH ROOT FOUNDATION NOR DISRUPT ROOT FOUNDATION DURING PLANTING OPERATION.

CONSTRUCT MOUND AS REQUIRED TO ENSURE PLANTS STABILITY DURING CONSTRUCTION INSTALLATION.

ARBOR TREE GUARD OR APPROVED EQUAL IS REQUIRED AROUND ALL TREES PLANTED IN LAWN (GRASS) AREAS.

USE OF ROOT GUARD BARRIERS IS PROHIBITED. FOR ALL TREES LOCATED WITHIN 5' FROM ANY SIDEWALK, CURBING, ASPHALT CONCRETE SURFACE, WALL OR FENCE, THE TREE SPECIES SHALL BE APPROVED BY CITY ENGINEER.

PLANTING TABLET (FERTI-TAB) SHALL BE PLACED BELOW FINISH GRADE NEAR ROOT FOUNDATION AT DEPTH & QUANTITY PER MANUFACTURER'S RECOMMENDATIONS.

ALL LANDSCAPE INSTALLATION SHALL BE IN ACCORDANCE WITH CITY STANDARDS, MANUFACTURER'S RECOMMENDATION, SECTION 20 OF THE STANDARD SPECIFICATIONS AND AS DIRECTED BY THE CITY ENGINEER.

ALL MATERIALS USED SHALL BE NEW AND FREE FROM DEFECTS.

SEE APPROVED LANDSCAPE AND IRRIGATION PLANS FOR SPECIFIC MODEL NO., SIZE, QUANTITY, MANUFACTURERS AND PERFORMANCE OF THE VARIOUS ITEMS.

SEE CITY DETAIL **6.10** FOR ADDITIONAL TREE IRRIGATION DETAILS.

DATE	REVISION	CITY OF TEHACHAPI		
		TREE & SHRUB PLANTING DETAILS		
		BOYLE ENGINEERING CORPORATION	DATE DRAWN 01/06	SHEET NO. 6.9

DWG: S:\T08_standard details\L1691_6-9.dwg USER: dghilarducci
DATE: Mar 03, 2008 2:37pm XREFS: BORDER

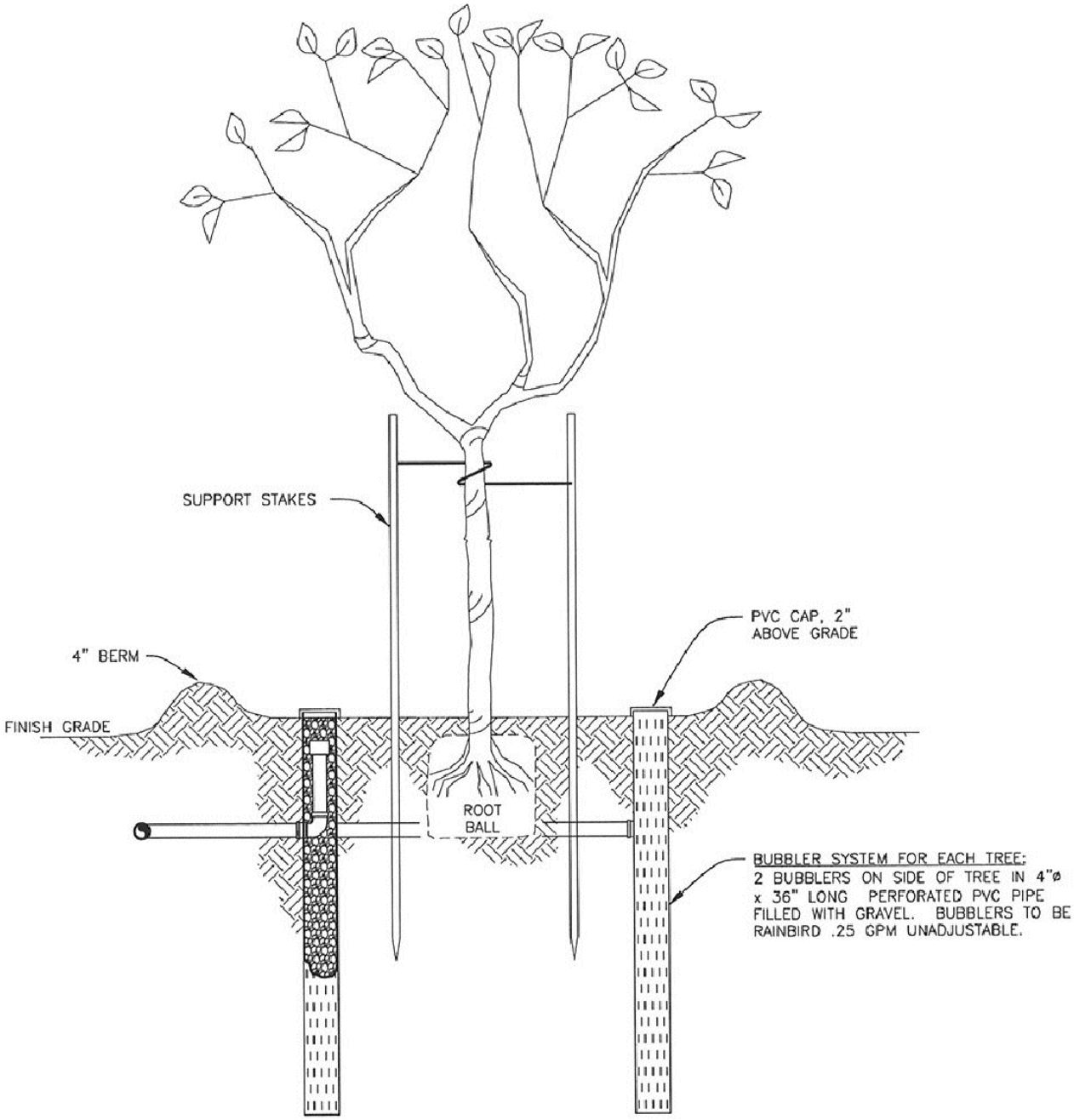

TREE IRRIGATION DETAIL

GENERAL NOTES:

ANY AND ALL CHANGES FROM THIS STANDARD DETAIL SHEET SHALL BE APPROVED BY THE ENGINEER PRIOR TO CONSTRUCTION.

ALL LANDSCAPE INSTALLATION SHALL BE IN ACCORDANCE WITH CITY STANDARDS, MANUFACTURER'S RECOMMENDATION, SECTION 20 OF THE STANDARD SPECIFICATIONS AND AS DIRECTED BY THE CITY ENGINEER.

USE TEFLON PIPE TAPE, OR APPROVED EQUAL, ON ALL THREADED JOINTS.

ALL FITTINGS SHALL BE SCH. 40 P.V.C., SIZED AS REQUIRED.

ALL NIPPLES SHALL BE SCH. 80 P.V.C., SIZED AS REQUIRED.

BUBBLERS TO BE PLACED IN A CAPPED 4"X36" PERFORATED PIPE FILLED WITH PEA GRAVEL, ON OPPOSITE SIDES OF TREE.

BUBBLERS TO BE RAIN BIRD .25 GPM UNADJUSTABLE, OR APPROVED EQUAL.

SEE CITY DETAIL 6.9 FOR ADDITIONAL TREE PLANTING DETAILS

DATE	REVISION

CITY OF TEHACHAPI

TREE IRRIGATION (BUBBLER SYSTEM)

BOYLE ENGINEERING CORPORATION

DATE DRAWN	SHEET NO.
01/06	6.10

DWG: S:\T08_standard details\L1691_6-10.dwg USER: dghilarducci
DATE: Mar 03, 2008 2:38pm XREFS: BORDER

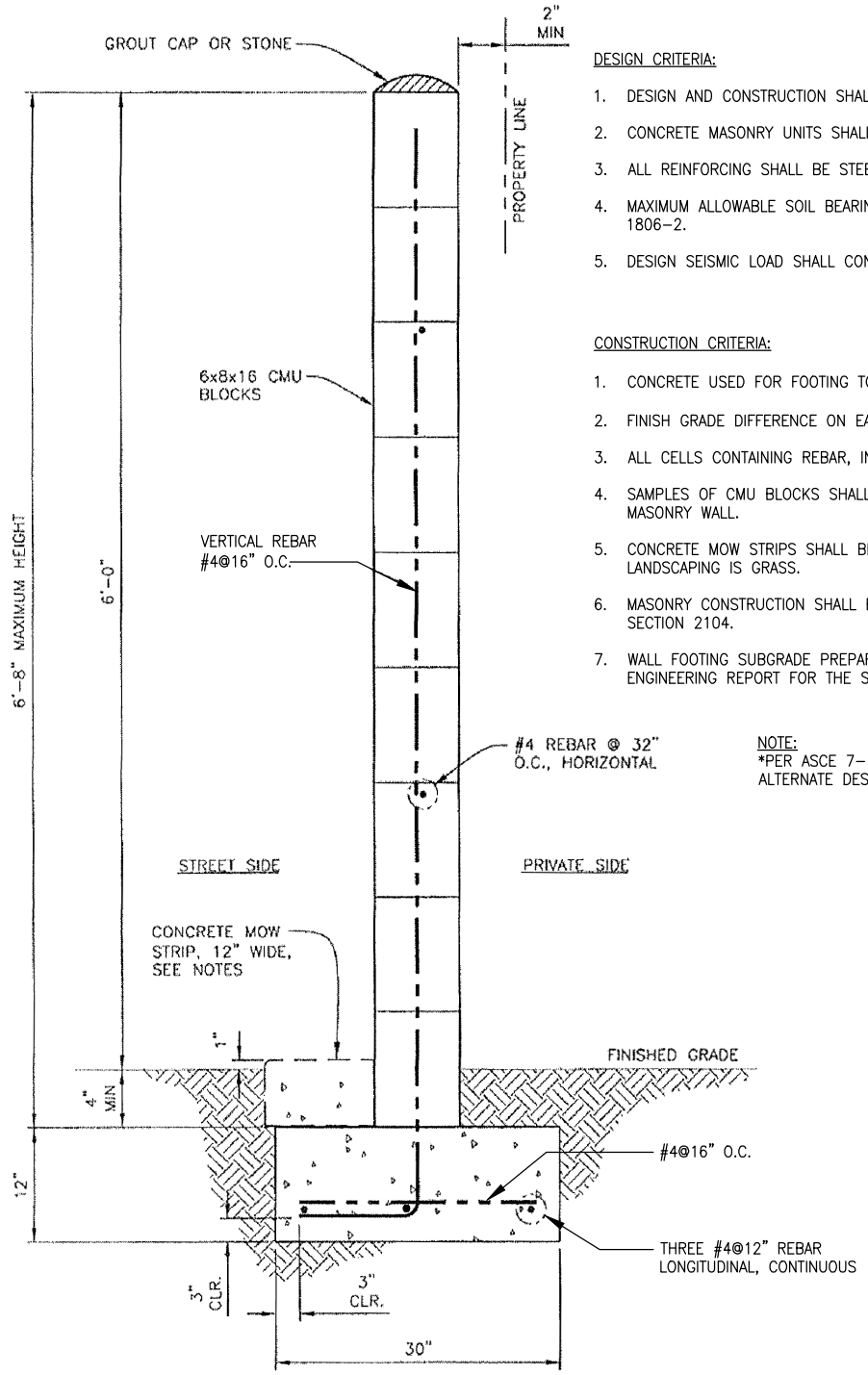

SECTION

DESIGN CRITERIA:

1. DESIGN AND CONSTRUCTION SHALL BE IN ACCORDANCE WITH THE CBC, 2013.
2. CONCRETE MASONRY UNITS SHALL CONFORM TO ASTM C90, GRADE N, MEDIUM WEIGHT.
3. ALL REINFORCING SHALL BE STEEL, GRADE 40.
4. MAXIMUM ALLOWABLE SOIL BEARING PRESSURE SHALL BE 1,500 PSF. PER CBC TABLE 1806-2.
5. DESIGN SEISMIC LOAD SHALL CONSIDER THE WALL IN SEISMIC DESIGN CATEGORY D.

CONSTRUCTION CRITERIA:

1. CONCRETE USED FOR FOOTING TO BE CLASS "B" CONCRETE, 2,500 PSI AT 28 DAYS.
2. FINISH GRADE DIFFERENCE ON EACH SIDE OF WALL NOT TO EXCEED 6".
3. ALL CELLS CONTAINING REBAR, INCLUDING BOND BEAMS, SHALL BE GROUTED.
4. SAMPLES OF CMU BLOCKS SHALL BE APPROVED BY THE CITY PRIOR TO USE ON ANY MASONRY WALL.
5. CONCRETE MOW STRIPS SHALL BE REQUIRED ON SIDE FACING STREET WHERE ADJACENT LANDSCAPING IS GRASS.
6. MASONRY CONSTRUCTION SHALL BE IN ACCORDANCE WITH THE MOST CURRENT CBC, SECTION 2104.
7. WALL FOOTING SUBGRADE PREPARATION SHALL BE AS RECOMMENDED BY SOILS ENGINEERING REPORT FOR THE SPECIFIC DEVELOPMENT.

NOTE:
*PER ASCE 7-10 SIMILAR TO ALTERNATE DESIGN METHOD PER ACI.

DATE	REVISION
1/15	ADDENDUM NO. 2
11/07	ADDENDUM NO.1

CITY OF TEHACHAPI

MASONRY WALL NON-BEARING

BOYLE ENGINEERING CORPORATION

DATE DRAWN	SHEET NO.
01/06	6.11

DWG: S:\T08_standard details\L1691_6-11.dwg USER: campbellv
DATE: Feb 03, 2015 2:22pm XREFS: BORDER

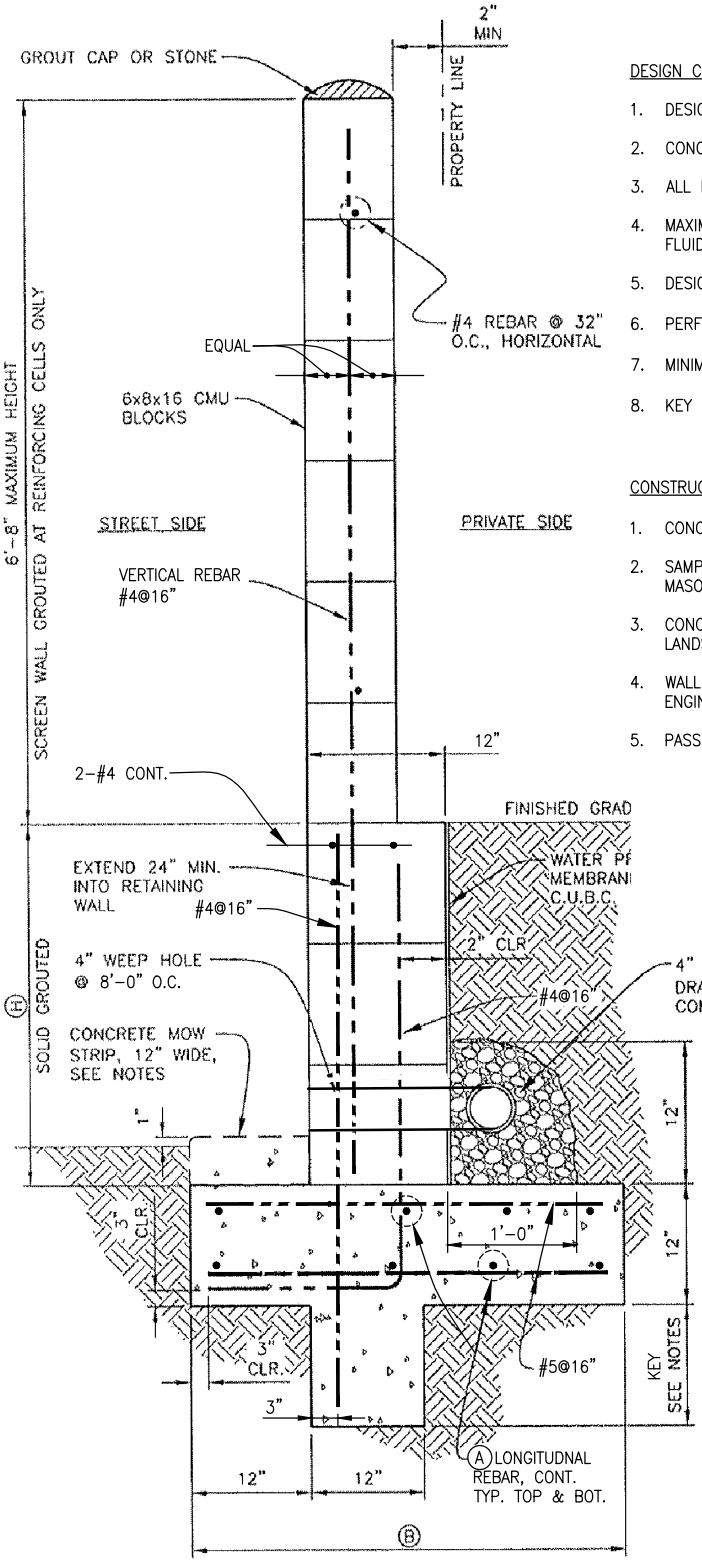

SECTION

DESIGN CRITERIA:

1. DESIGN AND CONSTRUCTION SHALL BE IN ACCORDANCE WITH THE CBC, 2013.
2. CONCRETE MASONRY UNITS SHALL CONFORM TO ASTM C90, GRADE N, MEDIUM WEIGHT.
3. ALL REINFORCING SHALL BE STEEL, GRADE 40.
4. MAXIMUM ALLOWABLE SOIL BEARING PRESSURE SHALL BE 1,500 PSF. SOIL EQUIVALENT FLUID PRESSURE IS 30 PSF.
5. DESIGN SEISMIC LOAD SHALL CONSIDER THE WALL IN SEISMIC DESIGN CATEGORY D.
6. PERFORATED DRAIN GRAVEL NOT REQUIRED FOR "H" ≤ 2'.
7. MINIMUM SETBACK REQUIREMENTS FOR STRUCTURE FROM WALL = "H" + 2'
8. KEY NOT REQUIRED FOR "H" ≤ 2'.

CONSTRUCTION CRITERIA:

1. CONCRETE USED FOR FOOTING TO BE CLASS "B" CONCRETE, 2,500 PSI AT 28 DAYS.
2. SAMPLES OF CMU BLOCKS SHALL BE APPROVED BY THE CITY PRIOR TO USE ON ANY MASONRY WALL.
3. CONCRETE MOW STRIPS SHALL BE REQUIRED ON SIDE FACING STREET WHERE ADJACENT LANDSCAPING IS GRASS.
4. WALL FOOTING SUBGRADE PREPARATION SHALL BE AS RECOMMENDED BY SOILS ENGINEERING REPORT FOR THE SPECIFIC DEVELOPMENT.
5. PASSIVE SOIL PRESSURE IS 100 PSF.

H	B	KEY	A
2'-0"	3'-0"	0	4#5
4'-0"	3'-9"	1'-6"	4#5
6'-0"	4'-8"	2'-9"	5#5

DATE	REVISION
1/15	ADDENDUM NO. 2
11/07	ADDENDUM NO.1

CITY OF TEHACHAPI

MASONRY WALL SCREEN/RETAINING

BOYLE ENGINEERING CORPORATION

DATE DRAWN	SHEET NO.
01/06	6.12

DWG: S:\T08_standard details\L1691_6-12.dwg USER: campbellv
DATE: Jan 30, 2015 11:09am XREFS: BORDER

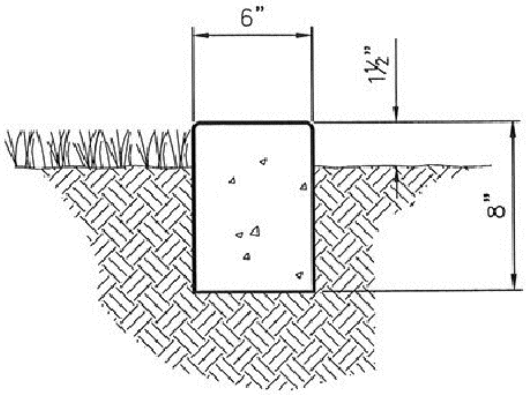

LANDSCAPING CURB

GENERAL NOTES:

LANDSCAPING CURB SHALL BE USED TO SEPERATE TURF AREAS FROM TREE AND SHRUB AREAS. SEE APPROVED LANDSCAPING PLANS FOR LOCATION.

SUBGRADE FOR LANDSCAPING CURB SHALL BE CONSTRUCTED TRUE TO GRADE AND CROSS SECTION WITH COMPACTION OF 90% TO A DEPTH OF 0.5 FT. BELOW SUBGRADE.

CONCRETE FOR LANDSCAPING CURB SHALL BE CLASS "B" (5 SACK) AND SHALL BE WITHIN 2½" TO 5½" SLUMP.

TIMBER FORMS SHALL BE SURFACED OF THE SIDE PLACED NEXT TO THE CONCRETE AND SHALL NOT BE LESS THAN 1½" THICK AFTER BEING SURFACED.

TOP AND FACE SHALL BE TROWLED SMOOTH, THEN GIVEN A FINE BRUSH FINISH PARALLEL TO THE CURB.

CONCRETE SHALL BE CURED WITH A WHITE PIGMENTED CURING COMPOUND COMPLYING TO SECTION 90-7.01B OF THE "STANDARD SPECIFICATIONS."

TOP OF CURB SHALL BE EDGED TO A ½" RADIUS.

CONCRETE SHALL CONTAIN NO ADDITIVES UNLESS PRIOR APPROVAL IS OBTAINED BY THE CITY ENGINEER.

WEAKENED PLANE JOINTS OR COLD JOINTS SHALL BE CONSTRUCTED AT 10 FOOT INTERVALS.

DWG: S:\T08_standard details\L1691_6-13.dwg USER: dghilarducci
DATE: Mar 03, 2008 2:52pm XREFS: BORDER

DATE	REVISION

CITY OF TEHACHAPI

LANDSCAPING CURB

BOYLE ENGINEERING CORPORATION

DATE DRAWN	SHEET NO.
01/06	6.13

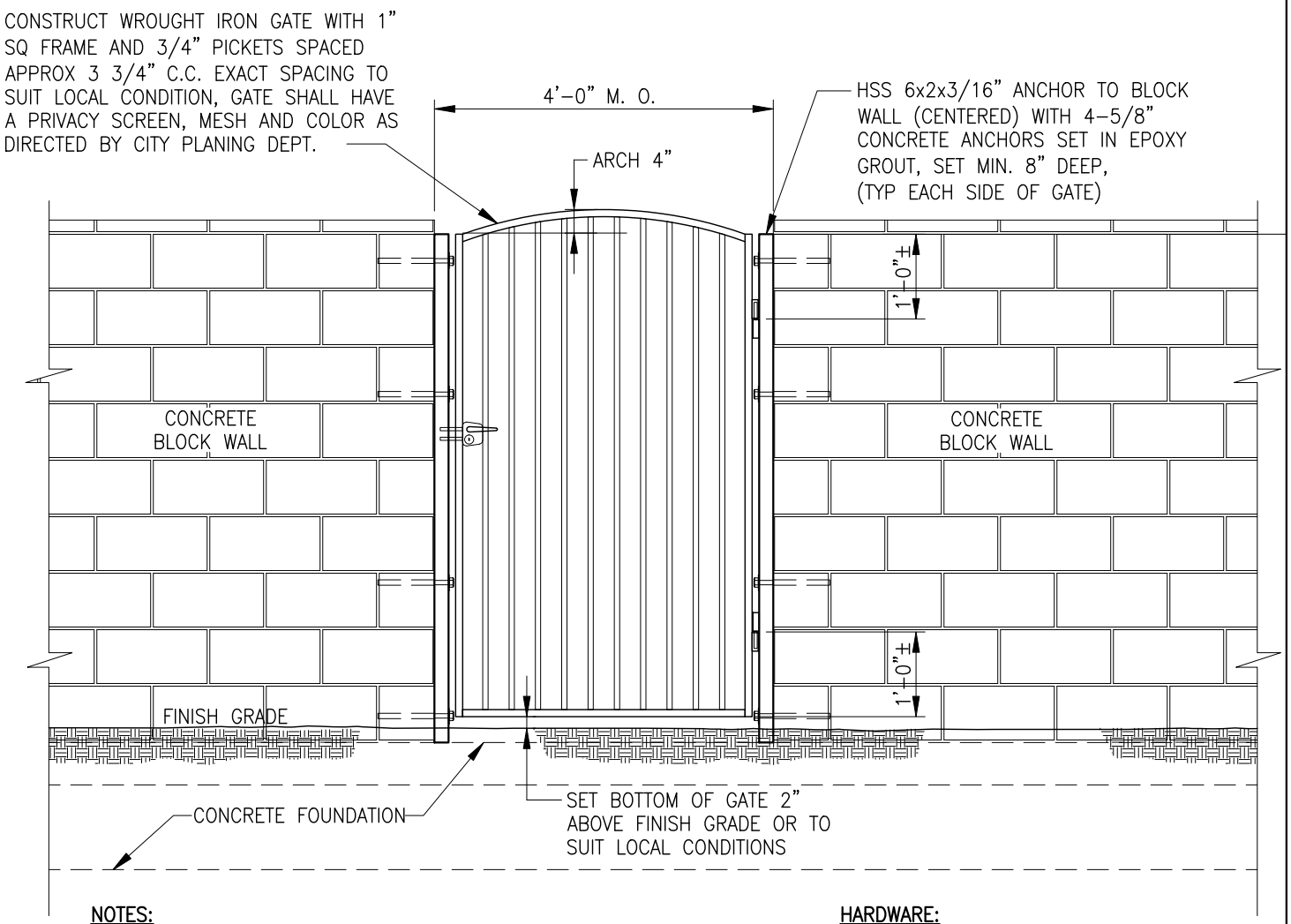

NOTES:

1. GATE LOCATION TO BE APPROVED BY THE ENGINEERING DEPARTMENT PRIOR TO CONSTRUCTION.
2. CONTRACTOR SHALL SAWCUT EXISTING WALL AT 1/2 BLOCK MODULE. SAWCUT SHALL BE PLUMB AND NEAT.
3. OWNER/DEVELOPER IS RESPONSIBLE FOR ANY AND ALL COSTS ASSOCIATED WITH REPAIRS TO EXISTING WALLS SHOULD DEMOLITION RESULT IN UNWANTED DAMAGE.

HARDWARE:

HINGES SHALL BE 5" BARREL TYPE HINGES WITH 5/8" PIN AND BALL BEARING OPERATION, 2 REQUIRED.

ONE 3-1/2" INDUSTRIAL STYLE GATE LOCK, WITH GATE LATCH STOP

		CITY OF TEHACHAPI
		WROUGHT IRON WALK GATE MASONRY WALL INSTALLATION
11/07	ADDENDUM NO.1	BOYLE ENGINEERING CORPORATION — DATE DRAWN 02/07 — SHEET NO. 6.14
DATE	REVISION	

DWG: S:\T08_standard details\L1691_6-14.dwg USER: dghilarducci
DATE: Mar 03, 2008 1:40pm XREFS: BORDER

NON–ACTIVE DISTURBED SOIL AREAS					
SEASON	TEMPORARY BEST MANAGMENT PRACTICE (BMP)	SLOPE (V:H)(1)			
		≤1:20	>1:20 ≤1:4	>1:4 ≤1:2	>1:2
RAINY(2)	SOIL STABILIZATION(5)	X	X	X	X
	SEDIMENT BARRIER (5)	X	X	X	X
	DESILTING BASIN (3)		X	X	X
NON–RAINY	SOIL STABILIZATION(5)	X (4)	X	X	X
	SEDIMENT BARRIER		X	X	X
	DESILTING BASIN (3)				X

ACTIVE DISTURBED SOIL AREAS				
SEASON	TEMPORARY BEST MANAGMENT PRACTICE (BMP)	SLOPE (V:H)(1)		
		≤1:20	>1:20 ≤1:2	>1:2
RAINY	SOIL STABILIZATION		X	X
	SEDIMENT BARRIER (5)	X	X	X
	DESILTING BASIN (3)		X	X
NON–RAINY	SOIL STABILIZATION			
	SEDIMENT BARRIER		X	X
	DESILTING BASIN (3)			X

(1) UNLESS OTHERWISE NOTED, THE TEMPORARY BMP IS REQUIRED FOR THE SLOPE INCLINATIONS INDICATED ON SLOPE LENGTHS GREATER THAN 10 FEET.

(2) THE MAXIMUM SLOPE LENGTH IS 100 FEET FOR SLOPE INCLINATIONS BETWEEN 1:20 (V:H) AND 1:2 (V:H) AND 50 FEET FOR STEEPER SLOPES.

(3) REQUIRED IN ADDITION TO THE TEMPORARY SEDIMENT BARRIER, WHERE FEASIBLE. FEASIBILITY WILL DEPEND ON SITE–SPECIFIC FACTORS SUCH AS AVAILABLE RIGHT–OF–WAY WITHIN PROJECT LIMITS, TOPOGRAPHY, SOIL TYPE, DISTURBED SOIL AREA WITHIN WATERSHED, AND CLIMATE CONDITIONS.

(4) IMPLEMENTATION OF CONTROLS NOT REQUIRED EXCEPT AT LEAST 24 HOURS PRIOR TO ALL PREDICTED RAIN EVENTS.

(5) THE INDICATED TEMPORARY BMP IS REQUIRED ON ALL SLOPES LENGTHS.

(6) SEDIMENT CONTROLS AND BARRIERS INCLUDE ALL TEMPORARY SEDIMENT CONTROL CONSTRUCTION BMPS IDENTIFIED IN THE STATEWIDE STORM WATER QUALITY PRACTICE GUIDELINES ASSOCIATED WITH THE SWMP. LINEAR BARRIERS SYSTEMS ARE EQUIVALENT TO WHAT ARE REFERRED TO IN THE GENERAL CONSTRUCTION PERMIT AS PERIMETER CONTROLS. THE INTENT IS TO PREVENT THE TRANSPORT OF SEDIMENT AT THE DOWNSLOPE EDGE OF DISTURBED SOIL AREAS.

(7) PERMANENT EROSION CONTROL SEEDING SHALL BE APPLIED TO ALL NON–ACTIVE AREAS DEEMED SUBSTANTIALLY COMPLETE DURING THE PROJECT'S DEFINED SEEDING WINDOW.

APPENDIX B
FORMS

IMPROVEMENT AGREEMENT

FOR

_____

THIS AGREEMENT made and entered into this day of_____, 20__ by and between the CITY OF TEHACHAPI, a municipal corporation of the State of California, hereinafter referred to as "CITY", and_____, hereinafter referred to as "SUBDIVIDER",

W I T N E S S E T H:

WHEREAS:

1. SUBDIVIDER is in the process of subdividing land which is located within CITY and labeled Tentative _____ (herein "Subdivision") pursuant to and in accordance with the provisions of the California Subdivision Map Act (Government Code Sections 66410 et seq.), hereinafter "Subdivision Map Act", and CITY's Subdivision Ordinance (Title 17 of the Tehachapi Municipal Code), hereinafter "Subdivision Ordinance"; and

2. SUBDIVIDER filed a tentative map for the Subdivision with the City Planning Commission which conforms with all of the provisions of the Subdivision Map Act and the Subdivision Ordinance, and the Planning Commission recommended approval and the City Council approved said tentative map in the manner prescribed by law subject to certain approved exceptions and conditions; and

3. SUBDIVIDER has now prepared a final map for the Subdivision (hereto sometimes "Final Map") and is desirous of filing it with CITY For its approval pursuant to and in accordance with the provisions of the Subdivision Map Act and in the Subdivision Ordinance; and

4. SUBDIVIDER has complied with all of the provisions of the Subdivision Map Act and the Subdivision Ordinance which, are applicable to the Subdivision, except that SUBDIVIDER has not completed the required improvement work nor set or placed all of the permanent monuments required for the Subdivision; and

5. The Subdivision Ordinance provides that if the improvement work has not been completed or if the permanent monuments have not been set or placed, the SUBDIVIDER must enter into an improvement agreement requiring completion of such improvements and placement of such monuments upon terms mutually agreeable to the City Council and the SUBDIVIDER and posted security as conditions for the Final Map to be recorded; and

6. CITY has approved the Final Map and is willing to accept on behalf of CITY all of the roads, boulevards, easements, utilities, and all other such items dedicated therein or deeded to CITY in connection therewith under the terms and conditions hereinafter set forth.

NOW, THEREFORE, in consideration of the mutual covenants and conditions herein contained, it is expressly agreed and understood as follows:

1. A. SUBDIVIDER shall construct, at its sole cost and expense, all of those facilities and improvements described as required for approval of this Subdivision as shown on the staff report described hereinafter. All such facilities and improvements shall be constructed in accordance with all provisions of the Subdivision Ordinance and the CITY's Improvement Standards applicable thereto and in accordance with but not limited to the following:

(1) The Improvement Plans, Profiles, Standards, and Specifications (hereinafter sometimes "Plans and Profiles") as approved by the City Engineer all of which are on file with the City Engineer and are incorporated herein in full and made a part of this Agreement by this reference; and

(2) The conditions and exceptions contained in the staff report approved by the City Council on_____, which report is on file in the City Planning Department and is incorporated herein in full and made a part of this Agreement by this reference.

B. In addition to the foregoing, SUBDIVIDER shall provide, prior to final acceptance of the work by City Council, the monument elevation data as required by the Subdivision Ordinance. Record drawings of all improvement plans shall be submitted to and approved by the City Engineer.

C. SUBDIVIDER at its sole cost and expense shall furnish all of the necessary materials, tools, equipment, machinery and labor to do all of the work and to construct all of the

improvements referred to herein as SUBDIVIDER's work, which shall be constructed by SUBDIVIDER in a good and workmanlike manner and in accordance with the Subdivision Map Act, the Subdivision Ordinance, CITY's Improvement Standards, the approved Plans and Profiles, and good engineering practices.

D. In the case of conflict between any of the provisions of the Subdivision Ordinance and any of the provisions of the CITY's Improvement Standards or the Plans and Profiles, the provisions of the Subdivision Ordinance shall prevail. In the case of a conflict between any of the provisions of the CITY's Improvement Standards and any of the provisions of the Plans and Profiles, the provisions of the CITY's Improvement Standards shall prevail. Any exceptions to this Section shall be valid only if approved in writing by CITY.

2. SUBDIVIDER also agrees to perform certain off-site improvements hereinafter referred to as "OFFSITES" authorized pursuant to Tehachapi Municipal Code Section 17.32.060.C and California Government Code Section 66485 to accommodate the Subdivision and to also benefit properties which are not within the Subdivision. The OFFSITES are more particularly described in Exhibit "A" attached hereto and by this reference made a part hereof. Pursuant to California Government Code Section 66486 authorizing reimbursement for the foregoing, CITY agrees to reimburse SUBDIVIDER for the actual cost of the OFFSITES (the "Reimbursement Costs"). The Reimbursement Costs shall represent the full and complete reimbursement due and owing SUBDIVIDER. The Reimbursement Costs shall be payable from written invoices submitted by SUBDIVIDER to CITY (the "Invoice") submitted from time to time but no more often than monthly. Each Invoice shall describe, in such detail as required by CITY the work that has been completed on the OFFSITES. No Invoice shall include charges for work which has not been completed. CITY may disapprove any Invoice which does not comply with the foregoing requirements or which represents work which is unsatisfactory to CITY or has not been completed in a timely manner as reasonably required by CITY. No more than two (2) such Invoices may be submitted prior to completion of construction when the last Invoice shall be submitted. The first Invoice shall cover completion of construction of no less than one-third (1/3) of the OFFSITES as reasonably determined by CITY and the second Invoice shall cover completion of construction of no less than the next one-third (1/3) of the OFFSITES as reasonably determined by CITY Each Invoice shall first be reviewed by the

City Manager or the City Manager's representative. If same is approved for payment, same shall be submitted to the City Council at the next regularly scheduled meeting of which the matter can be presented for consideration. Thereafter, upon approval by the City Council, the Invoice shall be paid in the amounts approved by the City Council within a reasonable time. Notwithstanding the foregoing, the final 10% of the Reimbursement Costs shall be withheld until 35 days after recordation of a notice of completion and thereafter paid provided no stop notices have been filed against the SUBDIVIDER. In the event preliminary notices are filed against the SUBDIVIDER, the CITY shall have the right to withhold from the Reimbursement Costs an amount equal to 110% of the amount stated in each preliminary notice until same has been released by the subcontractor, employee, or supplier filing same. The OFFSITES shall be completed the earlier of (a) two years after the recordation of the Final Map or (b) 365 days after commencement of construction of the OFFSITES. SUBDIVIDER shall provide CITY with an estimated cost of the OFFSITES prior to commencement of construction and CITY shall approve or disapprove the estimated Reimbursement Costs as to each of the OFFSITES prior to construction of same. If CITY disapproves any estimated Reimbursement Cost, then the OFFSITE related to same shall not be constructed without further CITY approval.

3. The SUBDIVIDER's required improvement work not to include the OFFSITES as listed in Exhibit "A" shall be secured by an instrument of credit or a letter of credit issued by a financial institution pledging that the funds are on deposit and guaranteed for payment**.** A copy of same are attached hereto as Exhibit "B" and by this reference made a part hereof. All of the work required herein shall be completed within one (1) year from the date of this Agreement unless the period of completion is extended by formal action of the City Council. All requests for extensions shall be made in writing by SUBDIVIDER prior to expiration of the term of this Agreement.

4. Upon completion of all SUBDIVIDER required improvements referred to herein and prior to acceptance of same by CITY, SUBDIVIDER shall furnish CITY with a guarantee bond or other satisfactory surety in the amount of the cost of the Improvements to guarantee against defective work or labor or defective materials furnished for said improvements for a period of one (1) year from the date of acceptance of said improvements by CITY. The date of acceptance shall be as defined in Section 17.32.050 of the Subdivision Ordinance.

5. A. All improvements shall be subject to inspection by the City Engineer or his designee and all improvements shall be completed to the satisfaction of the City Engineer. SUBDIVIDER shall give the City Engineer at least twenty-four (24) hours notice before commencing any part of the improvement work required for the Subdivision under this Agreement. If the improvement work is interrupted for a continuous period in excess of ninety-six (96) hours, SUBDIVIDER shall give twenty-four (24) hours notice to City Engineer prior to resuming the improvement work.

B. As SUBDIVIDER completes the required improvements on a particular phase of the Subdivision and those improvements are approved and accepted by the City Engineer, occupancy of the structures within that phase will be permitted.

C. The City Council shall order the City Manager to issue a Notice of Final Acceptance of the improvements and to record a Notice of Completion when all of the following have occurred and the City Council finds the following documents to be true, complete and proper: (1) SUBDIVIDER has notified the City Council and City Engineer in writing that the improvements described in this Agreement are complete; (2) the City Engineer has notified the City Council in writing that he has inspected and accepted said improvements and that they are complete; (3) a final cost accounting has been completed and any sums due for plan check and inspection fees have been paid by SUBDIVIDER to CITY; (4) the "record drawings" have been filed with and approved by CITY, sewer record drawings and monument elevation data have been submitted to and approved by CITY, and SUBDIVIDER' s Engineer has submitted a certificate stating all required survey monuments have been set; (5) a guarantee bond or other form of security acceptable to CITY to guarantee the work for a period of one (1) year from final acceptance has been furnished; and (6) a Grant Deed conveying said improvements to CITY has been properly executed in recordable form and is delivered to CITY for recording.

6. SUBDIVIDER hereby guarantees the improvements for a period of one (1) year following recordation of a Notice of Completion of the improvements against defective work or labor done or defective material furnished in the performance of this Agreement, and SUBDIVIDER agrees to correct, repair or replace promptly when demanded by CITY, all such defective work or labor done, or defective materials furnished, as may be discovered within such one (1) year period and reported to the City Engineer.

7. A. If the City Engineer, in the exercise of his reasonable discretion, determines:

(1) That SUBDIVIDER has failed to properly and fully complete all of the improvements in accordance with this Agreement, and within the time, or any extension of time, provided herein; or

(2) That SUBDIVIDER has failed or neglected to begin the work, or any feature of the work, within a time which will reasonably allow its completion within the time, or any extension of time, provided in this Agreement; or

(3) That SUBDIVIDER has abandoned any of the work; or

(4) That SUBDIVIDER, if an individual, has been declared incompetent or placed under the care of a guardian or conservator, or has disappeared; or

(5) That SUBDIVIDER has filed a petition in bankruptcy or has been declared bankrupt;

Then, the City Engineer may give SUBDIVIDER and its surety fourteen (14) days written notice to proceed with the work, without prejudice to any other remedy CITY may have in law or equity.

B. If the surety shall proceed with the work, the surety shall be subject to all of the provisions of this Agreement.

C. If SUBDIVIDER or its surety shall fail or neglect to proceed with the work diligently and in good faith in accordance with this Agreement after such notice has been given, CITY may thereafter, at its sole option and without prejudice to any other remedy, provide the necessary supervision, equipment, materials and labor as it may determine necessary to undertake and complete the improvements or any part thereof in the manner required by this Agreement, by independent contract or by CITY forces, all for the account and at the expense of SUBDIVIDER, and SUBDIVIDER and its surety shall be liable to CITY and shall pay CITY, on demand, all expenses incurred by CITY in the course thereof. In the event any of the work is done by CITY employees, SUBDIVIDER and its surety shall be responsible for payment of the salaries of said employees during the time that they worked on the project.

8. A. If SUBDIVIDER does not complete all improvements required by this agreement within the time provided, including any approved extension of such time, SUBDIVIDER, for SUBDIVIDER and, for such purpose, as agent of each party having any record title interest in the property, consents to and agrees that CITY, at its option, may revert the real property to acreage by recordation of a parcel map over such property and showing such property as one parcel, provided that no parcel has been sold prior to CITY's taking such action. Such parcel map shall delineate all streets and easements not abandoned thereby. By executing this agreement, SUBDIVIDER warrants that it has authority from each party having record title interest to act as such party's agent for purposes of the provisions of this paragraph and to waive, and hereby waives, any right to a hearing on such reversion by parcel map.

B. Should CITY revert the property to acreage, the surety shall thereby he released from any obligation to construct or to pay the cost of construction of all private improvements within the subdivision and all public improvements except those relating to bordering streets or to arterial or collector streets (e.g., curbs, gutters, sidewalks, paving, utility pole relocation, storm drain facilities, etc.) adjacent to or within the subdivision.

C. The provisions of this paragraph shall not apply if individual parcels within the subdivision have been sold.

9. CITY shall not nor shall any officer or employee thereof be liable or responsible for any accident, loss or damage happening or occurring from the improvement work specified in this Agreement prior to the completion and acceptance of same by CITY nor shall CITY or any officer or employee thereof be liable for any person injured or property damaged by reason of the nature of said work or by reason of the acts or omissions of SUBDIVIDER, or its contractors, agents, or employees in the performance of said work, and all of said liability is hereby assumed by SUBDIVIDER. SUBDIVIDER shall, and does hereby hold harmless, indemnify and defend CITY, its Council members, commissioners, officers, agents and employees from any and all claims, demands, causes of action, liability or loss of any nature because of or arising out of the acts or omissions of SUBDIVIDER or its contractors, agents or employees in the performance of this Agreement.

10. A. In addition to any other form of insurance or bond required under the terms of this Agreement, SUBDIVIDER shall procure and maintain for the duration of this Agreement the following types and limits of insurance:

(1) Automobile liability insurance for owned, non-owned and hired autos, providing coverage on an occurrence basis for bodily injury, including death, of one or more persons, property damage and personal injury, with limits of not less than one million dollars ($1,000,000) per occurrence; and

(2) Broad form commercial general liability insurance, providing coverage on an occurrence basis for bodily injury, including death, of one or more persons, property damage and personal injury, with limits of not less than one million dollars ($1,000,000) per occurrence; and

(3) Workers' compensation insurance with statutory limits and employer's liability insurance with limits of not less than one million dollars ($1,000,000) per accident.

B. All policies shall include CITY, its elected officials, boards, commissions, agents, officers, employees and representatives as additional insureds. They shall also provide for contractual liability coverage.

C. All policies shall he issued by an insurance company authorized to do business in the State of California and shall be approved by CITY.

D. All insurance shall be primary coverage insurance and no insurance of CITY shall be called upon to contribute to a loss under the limits of SUBDIVIDER' s policies.

E. All policies shall contain an endorsement providing CITY with thirty (30) days written notice of cancellation or coverage reduction.

F. SUBDIVIDER shall maintain said insurance coverage until all work required to be performed under the terms of this Agreement is satisfactorily completed as evidenced by formal acceptance by the City Council. In the event of cancellation of said insurance or any part thereof prior thereto, SUBDIVIDER shall immediately cease all operations under this Agreement. The City Manager shall have the right to terminate all such operations if SUBDIVIDER fails or refuses to do so.

G. SUBDIVIDER shall furnish CITY with a Certificate of Insurance and copies of all insurance policies evidencing the Insurance required under this Agreement.

H. SUBDIVIDER shall be responsible for any deductibles or self-insured retentions under all policies.

I. The foregoing insurance requirements shall be provided by or on behalf of all subcontractors. SUBDIVIDER shall be responsible for determining and guaranteeing all subcontractors are insured as set forth herein.

11. Should either party hereto institute any action or proceeding of any nature whatsoever in a court of law, equity, arbitration or otherwise to enforce any provision of this Agreement or for a declaration of such party's rights or obligations hereunder or for any other remedy, the prevailing party shall be entitled to reasonable attorney's fees and actual costs.

12. This Agreement is made, entered into, executed and is to be performed in Kern County, California.

13. Time is hereby expressly declared to be the essence of this Agreement and of each and every provision thereof, and each such provision is hereby made and declared to be a material, necessary and essential part of this Agreement.

14. The covenants and agreements herein contained are binding on the parties hereto, their legal representatives, heirs, successors and assigns.

15. If any provision of this Agreement is held by any court to be invalid, void, or unenforceable, the remaining provisions shall not be affected thereby and shall continue in full force and effect.

16. All notices herein provided to be given by either party to the other shall be deemed to have been fully given when made in writing where required in this Agreement and deposited in the United States Mail, registered, postage prepaid, and addressed as follows: to SUBDIVIDER:_____, _____, California_____, Fax – ( )_____, Telephone ( )_____; CITY – Greg Garrett, 115 South Robinson Street, Tehachapi, California 93561, Fax – (661) 822-8559, Telephone (661) 822-2200; and Thomas F. Schroeter, City Attorney for Licensee, 254 "H" Street, Bakersfield, California

93304, Fax (661) 327-1203, Telephone (661) 327-4189. Any party to this Agreement may change its address by notifying the other party in the manner described herein.

17. All signatures of SUBDIVIDER shall be acknowledged.

18. If SUBDIVIDER is a corporation or limited liability company, SUBDIVIDER shall provide CITY with a certified copy of its Resolution designating the individuals authorized to execute this Agreement. If SUBDIVIDER is a general or limited partnership, SUBDIVIDER shall provide CITY with a certified copy of its recorded Statement of Partnership designating the persons authorized to sign on behalf of the Partnership.

IN WITNESS WHEREOF, the parties herein have hereunto set their hands the day and year first above written.

_____
, Mayor of the
City of Tehachapi, California

BY:

BY:

BY:_____
Name:
Its:

RECORDING REQUESTED BY AND
FOR THE BENEFIT OF AND
WHEN RECORDED MAIL TO:

City Clerk's Office
CITY OF TEHACHAPI
115 South Robinson Street
Tehachapi, CA 93561

SPACE ABOVE THIS LINE FOR RECORDER'S USE

Recording Fee $ None

IRREVOCABLE OFFER OF DEDICATION

FOR A VALUABLE CONSIDERATION, receipt of which is hereby acknowledged, _____, hereinafter called GRANTOR, hereby grants to the CITY OF TEHACHAPI, a political subdivision of the State of California, an Irrevocable Offer of Dedication of an easement for ingress, egress and road purposes, over and across the hereinafter described real property in the City of Tehachapi, County of Kern, State of California:
Said easement shall be kept open, clear and free from buildings and structures of any kind.

This Offer of Dedication is made pursuant to Section 7050 of the Government Code of the State of California and may be accepted at any time by the City Council of the City of Tehachapi.

This Offer of Dedication shall convey to the City of Tehachapi upon its acceptance a superior right of easement over any facility or facilities located within or under the aforementioned parcel of land.

This Offer of Dedication may be terminated and right to accept such offer abandoned in the same manner as is prescribed for the vacation of streets or highways by Part 3 of Division 9 of Streets and Highways Code of the State of California. Such termination and abandonment may be made by the City Council of the City of Tehachapi.

This Offer of Dedication shall be irrevocable and shall be binding on the GRANTOR, his heirs, executors, administrators, successors and assigns.

The term GRANTOR as used herein shall include the plural as well as the singular number and word "he" shall include the feminine and neuter gender as the case may be.

IN WITNESS HEREOF, GRANTOR has executed this Irrevocable Offer of Dedication this_____day of _____, 20____ .

GRANTOR:_____

_____

_____

(Attach Notarial Jurat)

RECORDING REQUESTED BY AND
FOR THE BENEFIT OF AND
WHEN RECORDED MAIL TO:

City Clerk's Office
CITY OF TEHACHAPI
115 South Robinson Street
Tehachapi, CA 93561

SPACE ABOVE THIS LINE FOR RECORDER'S USE

Recording Fee $ None

EASEMENT DEDICATION

FOR A VALUABLE CONSIDERATION, receipt of which is hereby acknowledged, _____, hereinafter called GRANTOR, hereby dedicates to the CITY OF TEHACHAPI, a political subdivision of the State of California, hereinafter called GRANTEE, an easement and right-of-way to lay, construct, reconstruct, maintain, operate, repair, renew, change the size of and remove water, sewer and/or drainage pipelines with appurtenant fittings, structures and other equipment, with the right of ingress to and egress from the same, over, through, under, along and across those certain parcels of land situated in the City of Tehachapi, County of Kern, State of California, and being more particularly described as follows:

GRANTOR and its successors further dedicates to the GRANTEE the right to trim such trees and other foliage and to cut such roots on said parcels of land as may be necessary for the construction, protection, maintenance, operation, renewal and replacement of such pipe line or lines necessary to carry water, sewage, and/or drainage over, under, across and through said lands, and the full exercise of the rights hereby dedicated, and covenants that no building or permanent improvements will be placed thereon.

IN WITNESS WHEREOF, GRANTOR has executed this Easement Dedication this____day of _____, 20_____.

GRANTOR:_____

_____

_____

(Attach Notarial Jurat)

RECORDING REQUESTED BY AND
FOR THE BENEFIT OF AND
WHEN RECORDED MAIL TO:

City Clerk's Office
CITY OF TEHACHAPI
115 South Robinson Street
Tehachapi, CA 93561

SPACE ABOVE THIS LINE FOR RECORDER'S USE

Recording Fee $ None

GRANT DEED AND DEDICATION

FOR A VALUABLE CONSIDERATION, receipt of which is hereby acknowledged, _____, GRANTOR, hereby GRANTS to the City of Tehachapi, a public agency, GRANTEE, the public improvement facilities described in Exhibit "A", attached hereto, which are located within the City of Tehachapi, State of California, and upon and within the parcel(s) of land described in Exhibit "B", attached hereto, both of said exhibits being by reference herein made parts hereof.

GRANTOR does hereby also DEDICATE said public improvement facilities to public use to be administered and controlled by GRANTEE and its successors.

In witness where of GRANTOR has executed this Grant Deed and Dedication this_____day of _____, 20___.

GRANTOR: _____

_____

_____

(Attach Notorial Jurat)

CITY OF TEHACHAPI

CERTIFICATE OF ACCEPTANCE

THIS IS TO CERTIFY that the interest in real property conveyed by_____ _____dated _____, 20__, from _____ _____to the City of Tehachapi, a political subdivision of the State of California, is hereby accepted subject to the following conditions:

_____

_____

_____

_____

By order of the City Council of the City of Tehachapi on_____, 20__, said City consents to the recordation thereof by its duly authorized officer.

DATED:_____

_____
City Administrator
City of Tehachapi

ATTEST:

_____
City Clerk
City of Tehachapi

(Seal)

RECORDING REQUESTED BY AND
FOR THE BENEFIT OF AND
WHEN RECORDED MAIL TO:

City Clerk's Office
CITY OF TEHACHAPI
115 South Robinson Street
Tehachapi, CA 93561

SPACE ABOVE THIS LINE FOR RECORDER'S USE

Recording Fee $ None

NOTICE OF COMPLETION

This is to certify that the Contract entered into on the ____ day of _____, by and between the City of Tehachapi, the Owner, and _____, the Contractor, for all work necessary to complete the _____ _____ has been completed in accordance with the requirements of the plans and specifications and contract documents, and I hereby acknowledge the completion and acceptance on the _____ day of _____, on behalf of the Owner.

By _____
Greg Garrett, City Manager

Greg Garrett, being duly sworn, says: That he is the City Manager and Authorized Agent of the City of Tehachapi, the City that executed the foregoing Notice as the Owner of the Property herein described; that he makes this verification on behalf of the City; and that he has read said Notice and knows the contents thereof, and that the facts there instated are true.

State of California
County of Kern

Subscribed and sworn to (or affirmed) before me on this _____ day of _____, 2015, by
(1)_____,
proved to me on the basis of satisfactory evidence to be the person who appeared before me.

Place Notary Seal Above

Signature _____

RECORDING REQUESTED BY AND
FOR THE BENEFIT OF AND
WHEN RECORDED MAIL TO:

City Clerk's Office
CITY OF TEHACHAPI
115 South Robinson Street
Tehachapi, CA 93561

SPACE ABOVE THIS LINE FOR RECORDER'S USE

Recording Fee $ None

OWNER'S CERTIFICATE

PARCEL MAP NO. _____

I (We) hereby certify that I (We) are the owners of, or have some right, title or interest in and to, the real property included within the subdivision shown upon Parcel Map No._____, and I (We) consent to the preparation and recordation of this Parcel Map.

_____ _____
Owner Owner

Attach Notarial Jurat(s)

PARCEL MAP RECORDED IN PARCEL MAP BOOK_____, PAGE_____.

Pursuant to Section 66436 (c)(1) of the Subdivision Map Act, I (We), the owner(s) named above, hereby request the waiver of the signature(s) of the following:

_____ _____
Name Nature of Interest

RECORDING REQUESTED BY AND
FOR THE BENEFIT OF AND
WHEN RECORDED MAIL TO:

City Clerk's Office
CITY OF TEHACHAPI
115 South Robinson Street
Tehachapi, CA 93561

SPACE ABOVE THIS LINE FOR RECORDER'S USE

Recording Fee $ None

PARCEL MAP WAIVER NO: _____

CERTIFICATE OF COMPLIANCE

(SECTION 66499.35, GOVERNMENT CODE)

The undersigned,_____, City Engineer of the City of Tehachapi, designated by the City Council of said City as Advisory Agency with respect to Parcel Maps, and acting herein on behalf of the City of Tehachapi, hereby certifies that the hereinafter-described parcel(s) of land comply(ies) with the provisions of the Subdivision Map Act of the State of California, regulating divisions of land.

Said parcel(s) of land being situated in the City of Tehachapi, County of Kern, State of California, and being more particularly described as follows:

Owner(s) of the described parcel(s) of land:
(Attach Notarial Jurat(s))

_____

_____

_____

_____

Dated this_____day of_____20_ .

_____
City Engineer
City of Tehachapi

TEHACHAPI
CALIFORNIA
Live Up.

115 South Robinson Street
Tehachapi, CA 93561

CITY USE ONLY
INVOICE #_____
DATE:_____
PAID ON:_____

ENCROACHMENT PERMIT

Permit No.:_____ Applicant Name: _____

Project Location: _____

Excavation:

Excavation in Public Right-of-Way Required? ☐ Yes ☐ No

(check as many as applicable to the proposed project)

Aboveground Utility:
- ☐ Electrical
- ☐ Telephone
- ☐ Cable TV
- ☐ Other

Underground Utility:
- ☐ Water
- ☐ Sewer
- ☐ Storm Drain
- ☐ Other
- ☐ Gas
- ☐ Electrical
- ☐ Telephone
- ☐ Cable TV
- ☐ Other

Installation/Repair/Replacement:
- ☐ Sidewalk
- ☐ Driveway
- ☐ Street Paving
- ☐ Curb & Gutter
- ☐ Dumpster/Storage
- ☐ Other

☐ Roadway is currently under pavement moratorium.

☐ Soil has been cement stabilized*

☐ Existing roadway has geotechnical fabric/grid*

*Saw cut is required to cut through the soil cement/fabric.

Please describe work scope: _____

_____

_____

USA Ticket No. _____ Related Building Permit No. _____

Permit will not be issued until USA Ticket Number is provided.

Start Date: _____ Completion Date: _____

All sections below must be completed. If not applicable, put N/A.

Contractor:_____ Owner: _____

Contact Name:_____ Contact Name: _____

Address:_____ Address:_____

Phone: _____ Phone: _____

Email: _____ Email:_____

Business License No.:_____ Contractor License No.:_____ Exp. Date:_____

The following items must be on file with the City prior to issuance of a permit.

Insurance Requirements

If construction will be performed by Homeowner:

1. Proof of homeowner's Insurance (including general liability coverage, address insured, and policy number).

If construction will be performed by Contractor:

1. Certificate of Insurance "ACORD" evidencing commercial general liability, and applicable worker's compensation coverage. See attached table.
2. 30-days Notice of Cancellation Endorsement.
3. Additional Insured CG 20 10 Endorsement naming the City of Tehachapi, its elected officials, agents, employees, and volunteers.
4. Additional Insured CG 20 37 Endorsement naming the City of Tehachapi, its elected officials, agents, employees, and volunteers.
5. Primary/Non-contributory Endorsement.
6. Commercial General Liability Waiver of Subrogation Endorsement.
7. Worker's Compensation Waiver of Subrogation Endorsement.

Improvement Security

1. Cash, check, bond or letter of credit equal to 110% of the total construction cost. (If value of public improvements exceeds $15,000)

Include the following with all applications:

- Attach complete plans and specifications (3 sets).
  - Approved plans or a sketch drawn to scale of the proposed work showing all dimensions, property lines, existing improvements and proposed improvements.
- A vicinity map is required with the streets and job location labeled.
- Traffic control plans.
  - Traffic control requirements are listed in City of Tehachapi Subdivision and Development Standards, pp 5-37.
- When other agencies are involved (County, Caltrans, Railroad, etc.) attach copies of approved permits if required.

Applicant (or owner's authorized agent) hereby acknowledges that he/she has read the contents of this application, is familiar with and will abide by the City of Tehachapi standards, specifications, drawings and ordinances. Failure to do so may result in postponement or cancellation of the work and Applicant will be responsible for any costs associated therewith.

Permit will not be issued until applicant provides current insurance certificates and proof of City business license. The undersigned does hereby agree to indemnify and uphold the City of Tehachapi free and harmless from liability.

Print Name:_____

Signature: _____ ☐ Owner ☐ Owner's Agent Date: _____

CITY USE ONLY

☐ Completed Application

☐ Complete Construction Plans (3 sets)

☐ Traffic Control Plan (3 sets)

☐ Approved Permits from Other Agencies

☐ Vicinity Map

☐ Copies of Insurance and Workers' Compensation Certificates

To Begin Work:

_____

Jay Schlosser, City Engineer

Date:_____

Work Completed & Inspected

Date:_____

Subject to all terms, conditions, and restrictions.

1. Definition: The term "encroachment" is used in this permit as defined in California Streets and Highways Code Section 1450. The term "grantor" shall mean the City of Tehachapi (the "City").
2. Acceptance of Provisions: Grantee agrees to the provisions herein. A surety bond in a form and amount satisfactory to the Grantor may be required to ensure performance in accordance with all terms, conditions and restrictions hereof. This permit is granted with the understanding that no precedent shall be established on the question of permitting any certain kind of encroachment within City rights of way.
3. Comply with Government Code Section 4216: No permit to excavate shall be valid unless the applicant has been provided an inquiry identification number by a regional notification center pursuant to Section 4216.
4. Notice Prior to Starting Work: Prior to commencing any work authorized herein, Grantee shall give **48** hours' notice to the Engineering Department. If work is discontinued for a period of twenty-four (24) hours, excluding weekends or holidays, twenty-four (24) hours' notice shall be given before restarting work.
5. Keep Permit on the Work: This permit shall be kept at the site of the work and upon request must be shown to any representative of Grantor or any Law Enforcement Officer.
6. Hours of Operation: Construction activity in the public right of way shall be performed between the hours of 7:00 a.m. to 5:00 p.m., Monday through Friday; except as may be specified in the approved permit.
7. Permits from Other Agencies: Grantee shall, whenever required by law, secure a written order or consent to the doing of the work from Caltrans, the California Public Utilities Commission, or any other public agency having jurisdiction and this permit shall not be valid or effective until such order or consent is obtained.
8. Storage of Material: No material shall be stored within eight (8) feet of the edge of pavement or traveled way, or within the shoulder line where the shoulders are wider than eight (8) feet. Such material shall not be so stored for more than three (3) consecutive calendar days.
9. Clean Up Right of Way: Upon completion of the work, all brush, timber, scraps and other material shall be entirely removed and the right of way left in a condition satisfactory to Grantor. Grantee shall dispose of all construction and demolition materials and other refuse through the City's authorized hauler.
10. Standards of Construction: All work shall conform to recognize City of Tehachapi Subdivision and Development Standards (COTSDS). The provisions of the permit shall supersede the COTSDS, if in conflict.
11. Supervision of Grantor: All work to be done shall be subject to the supervision and satisfaction of the Grantor.
12. Future Moving of Installation: Grantee agrees that upon request by Grantor, the encroachment will be immediately removed at Grantee's own sole risk, cost and expense.
13. Liability for Damages, Insurance: Grantee shall indemnify the City, and all of its officers, employees, servants and agents, and shall defend and hold them harmless from any and all claim of liability for personal injury or property damage due to any acts or failure to act in connection with the permission granted herein to Grantee including, without limitation, any construction, repair or maintenance arising from or in connection with any work permitted herein. Grantee shall maintain a comprehensive general liability insurance policy in amounts as listed in Table "A" and which shall name City, its officers, Councilmember's, employees, agents, and representatives as additional insured's and which shall be primary insurance to any insurance or joint powers coverage maintained by City and City's insurance or joint powers coverage shall be noncontributory."
14. Making Repairs: Grantee shall promptly make any and all repairs to right of way surfaces and road paving unless Grantor gives notice of its election to make such repairs itself. If Grantor gives such notice, Grantee shall immediately purchase and have delivered at the site materials specified by Grantor. All payments for labor, equipment and other charges by Grantor for or on account of such work shall be made by Grantee within ten (10) days from the date of any bill, written order or voucher sent by or approved by Grantor. Grantor may require a deposit in an amount sufficient to cover the estimated cost before starting such repairs.
15. Care of Drainage: If the work herein contemplated shall interfere with established drainage, suitable provision shall be made by Grantee so as not to present a hazard or cause damage.
16. As Built Requirements: After completion of underground or surface work of consequence. Grantee shall, when requested, furnish to the City "As Built" plans showing location and details.
17. Construction and Repair: Grantee shall properly construct, maintain and repair any encroachment authorized herein, and shall exercise reasonable care in inspecting or immediately repairing any injury to the highway which occurs as a result of the existence of the encroachment or as the result of any work done hereunder.

18. Plan Approval: This permit does not relieve the Grantee of responsibility for correction of mistakes, errors or omissions by same. If during the course of construction of these improvements, public interest requires a modification or departure from the COTSDS, plan details, or this permit, the City Engineer shall have authority to require in writing such modification or departure and specify the manner in which the same is done.
19. Crossing Roadway: Service and other small diameter pipes shall be jacked or otherwise forced underneath pavement without disturbing the surface thereof. Pavement or roadway shall not be cut or otherwise disturbed except as may be specified in the approved permit. Service pipes are not permitted inside of culvert structures used as drainage facilities.
20. Limit Excavation: No excavation shall be made closer than eight (8) feet from the edge of the pavement except as may be specified in the approved permit.
21. Tunneling: No tunneling is permitted except as may be specified in the approved permit.
22. Depth of Pipes: The depths of pipe shall meet the minimum requirements as specified in the COTSDS and the corresponding uses.
23. Backfilling: All backfilling is to be moistened as necessary and thoroughly tamped. Backfill material shall be a uniform grading as directed by the Grantor. Backfill shall also comply with any provisions in the approved permit.
24. Maintain Surface: Grantee shall maintain the surface over any and all structures placed hereunder as long as same shall exist.
25. Pipes Along Roadway: Pipes and utilities paralleling the pavement shall be located at such distance and at such depth from the pavement as specifically directed in the approved permit. Cutting of tree roots is not permitted.
26. Location Pole Lines: Pole lines shall be located as specifically directed in the approved permit.
27. Public Utilities Commission Orders: All clearance and type of construction shall be in accordance with all applicable orders of the California Public Utilities Commission unless more restrictive provisions are required by City Ordinance.
28. Permission from Property Owners: Whenever necessary. Grantee shall secure written permission from abutting property owners prior to the starting of any work hereunder.
29. Grades and Specifications: Grades and types of construction shall be as detailed by plans or stated in the approved permit for road approaches, connecting pavement and other work.

TABLE "A"

LIABILITY INSURANCE TABLE

General Liability	
For improvements valued > $20,000	Bodily Injury and Property Damage coverage shall be for not less than $ 1,000,000 General Aggregate $ 1,000,000 Products/Completed Operations Aggregate $ 1,000,000 Personal and Advertising Injury $ 1,000,000 Each Occurrence OR Bodily Injury and Property Damage coverage shall be in a Combined Single Limit of not less than $ 1,000,000 Each Occurrence and Aggregate
For improvements valued < $20,000	Bodily Injury and Property Damage coverage shall be for not less than $ 100,000 General Aggregate $ 100,000 Products/Completed Operations Aggregate $ 100,000 Personal and Advertising Injury $ 100,000 Each Occurrence OR Bodily Injury and Property Damage coverage shall be in a Combined Single Limit of not less than $ 100,000 Each Occurrence and Aggregate

TEHACHAPI
CALIFORNIA
Live Up.

APPLICATION FOR CONDITIONAL USE PERMIT

Description of project and use for which Conditional Use Permit is being requested:_____

_____

The street address (if there is no street address indicate Block No.) is:_____

The Legal Description (As shown on Deed, Official County Records, or Title Report) is:_____

_____

Assessors Parcel Number:_____Property Zoning Designation_____

Is the site on the Cortese List? Yes ☐ No ☐

The following attachment is mandatory for this application to be processed.

A. **NINE COPIES AND ONE 8½ X 11 OF SITE PLAN AND COLORED ELEVATIONS, FULL SIZE SITE PLAN AND COLORED ELEVATIONS MOUNTED ON FORM BOARD** drawn to scale and fully dimensioned showing the following: The entire lot as described in the legal description; all existing and proposed buildings and uses; walls and fences (location, height and materials); existing and proposed parking (number of spaces, striping and wheel stops); method of ingress and egress, signs (area and elevations); loading areas; exterior lighting methods; elevations of all buildings and structures indicating building materials and colors.

B. **FEES**

CUP	$1,765.00
Public Hearing Fee	$130.00
Property Owner Notification Fee	$25.00
Categorical Exemption	$211.00
Negative Declaration	$3,190.00
Fish and Game Fees	$2,010.50
County Clerk Recording Fee	$50.00
Scan Approved Plan on CD	$11.00 First Page
Additional Pages	$3.00 per page

As part of the review process of your project, you will be required to post signs on your property giving notice of your proposal. Attached is the Posting Public Hearing Signs Application

Checks shall be made payable to the City of Tehachapi.

Applicant_____Signature_____
(Print or Type)

Address_____Phone_____Fax_____

Record Owner_____Signature_____

Address_____Phone_____Fax_____

PROCESSING COSTS:

The City of Tehachapi operates on the basis of full cost recovery for the processing of planning projects. Owner/Applicant will be billed for the full cost of engineering services plus a 15% administrative fee.

Invoices are due and payable upon receipt. Owner/Applicant will receive a past due notice for invoices that are not paid within a 30 day period and work will be ceased if invoices are not paid by the next billing cycle. If invoices exceed the 60 day period the account will be subject to collections.

CERTIFICATION:

I hereby certify that I understand the retainer and billing procedure referenced in this application. The property owner further certifies that they are legal owner of the property and consent to the application.

_____	_____
Applicant's signature	Property owner's signature
_____	_____
Applicant's printed name	Property owner's printed name
_____	_____
Date	Date

CITY OF TEHACHAPI PLANNING DEPARTMENT
ENVIRONMENTAL INFORMATION FORM
(To Be Completed By Applicant)

Date Filed:_____

General Information

1. Name and address of developer or project sponsor:_____
   _____
2. Address of project:_____
   Assessor's Block & Lot Number:_____
3. Name, address, and telephone number of person to be contacted concerning this project:_____
   _____
4. Indicate number of the permit application for the project to which this form pertains:_____
   _____
5. List and describe any other related permits and other public approvals required for this project, including those required by city, regional, state and federal agencies:_____
   _____
6. Existing zoning district:_____
7. Proposed use of site (Project for which this form is filed):_____
   _____

Project Description

8. Site size.
9. Square footage.
10. Number of floors of construction.
11. Amount of off-street parking provided.
12. Attach plans.
13. Proposed scheduling.
14. Associated project.
15. Anticipated incremental development.

16. If residential, include the number of units, schedule of unit sized, range of sale prices or rents, and type of household size expected.

17. If commercial, indicated the type, whether neighborhood, city or regionally oriented, square footage of sales area, and loading faciltites.

18. If industrial, indicate type, estimated employment per shift and loading facilities.

19. If institutional, indicate the major function, estimated employment per shift, estimated occupancy, loading facilites, and community benefits to be derived from the project.

20. If the project involves a variance, conditional use or rezoing application, state this and indicate clearly why the application is required.

Are the following items applicable to the project or its effects? Discuss below all items checked yes (attach additional sheets as necessary).

	Circle One	
21. Change in existing features of any bays, tidelands, beaches, or hills, or substantial alteration of ground contours.	Yes	No
22. Change in scenic views or vistas from existing residential areas or public lands or roads.	Yes	No
23. Change in pattern, scale or character of general area of project.	Yes	No
24. Significant amounts of solid waste or litter.	Yes	No
25. Change in dust, ash, smoke, fumes or odors in vicinity.	Yes	No
26. Change in ocean, bay, lakes stream or ground water quality or quantity, or alteration of existing drainange patterns.	Yes	No
27. Substantial change in existing noise or vibration levels in the vicinity.	Yes	No
28. Site on filled land or on slope of 10% or more.	Yes	No
29. Use of disposal of potentially hazardous materials, such as toxic substances, flammables or explosives.	Yes	No
30. Substantial change in demand for municipal services (police, fire, water, sewage, etc.).	Yes	No
31. Substantially increase fossil fuel consumption (electricity, oil, natural gas, etc.).	Yes	No
32. Relationship to a larger project or series of projects.	Yes	No

33. Describe the project site as it exists before the project, including information on topography, soil stability, plants and animals, and any cultural, historical or scenic aspects. Describe any exisiting structures on the site, and the use of the structures. Attach photographs of the site. Snapshots or Polaroid photos will be accepted.

34. Describe the surrounding properties, including information on plants and animals and any cultural, historical or scenis aspects. Indicate the type of land use (residential, commercial, etc.), intensity of land use (one-family, apartment houses, shops, department stroes, etc.) and scale of development (height, frontage, set-back, rear yard, etc.). Attach photographs of the vicinity. Snapshots or Polaroid photos will be accepted.

Certification

I hereby certify that the statements furnished above and in the attached exhibits present the data and information required ffor this initial evaluation to the best of my ability, and that the facts, statements, and information presented are true and correct to the best of my knowledge and belief.

_____ _____

Date Signature

For_____

CITY OF TEHACHAPI PLANNING DEPARTMENT
APPLICATION FOR FINAL MAP

We, the undersigned Property Owners of the property described below, do hereby apply for approval for Final Subdivision.

The Legal Description (As shown on Deed, Official County Records, or Title Report) is:

_____

_____

_____

_____

_____

_____

The following attachments are mandatory for this application to be processed.

A. SEVEN COPIES of the Final Map.

B. *FILING FEE $3,090.00 plus staff time and materials

Applicant: _____

Signature: _____

Address: _____

Phone: _____

Record Owner: _____

Signature: _____

Address: _____Phone:_____

*City Engineer actual cost plus 15% administrative fee.

TEHACHAPI
CALIFORNIA
Live Up.

CITY OF TEHACHAPI

APPLICATION FOR GENERAL PLAN AMENDMENT

WE, THE UNDERSIGNED property owners hereby request the Amendment of the General Plan for the of the following described property from _____Designation to _____.

THE LEGAL DESCRIPTION (As shown on Deed, Official Records or Title Report) is:
NOTE: If more than one (1) Zone Change is being requested, describe each parcel separately and indicate Zone requested for each.

Is the site on the Cortese List? Yes No

The following attachments are mandatory for this application to be processed:

A. PROPERTY MAP – (Assessors Parcel Map, Title Map or Subdivision Map.) Drawn to scale and sufficiently legible to verify accuracy of legal descriptions submitted above.

B.

FILING FEE:	$1,629.00
Public Hearing Fee	$130.00
Property Owner Notification Fee	$25.00
Negative Declaration	$3,190.00
Fish & Game Fee Neg Dec	$2,156.25
Fish & Game Fee EIR	$2,995.25
County Clerk Recording Fee	$50.00

PLEASE READ CAREFULLY BEFORE SIGNING OR FILING:

Submission of this application does not imply approval of the General Plan Amendment by the Planning Department.

Applicant_____Signature_____
(Please Print or Type)

Address_____Phone_____

Record Owner_____Signature_____
(Please Print or Type)

Address_____Phone_____

PROCESSING COSTS:

The City of Tehachapi operates on the basis of full cost recovery for the processing of planning projects. Owner/Applicant will be billed for the full cost of engineering services plus a 15% administrative fee.

Invoices are due and payable upon receipt. Owner/Applicant will receive a past due notice for invoices that are not paid within a 30 day period and work will be ceased if invoices are not paid by the next billing cycle. If invoices exceed the 60 day period the account will be subject to collections.

CERTIFICATION:

I hereby certify that I understand the retainer and billing procedure referenced in this application. The property owner further certifies that they are legal owner of the property and consent to the application.

_____	_____
Applicant's signature	Property owner's signature
_____	_____
Applicant's printed name	Property owner's printed name
_____	_____
Date	Date

TEHACHAPI
CALIFORNIA
Live Up.

APPLICATION NO._____

CITY OF TEHACHAPI
GRADING PERMIT APPLICATION

Project Address:_____

Project Parcel No.:_____**Zoning:**_____

Tract No.:_____**Lot No.:**_____

Owner:_____

Address:_____

Contractor:_____**License No.:**_____

Engineer:_____

Address:_____

A Memo from the Director is required prior to grading.

CITY OF TEHACHAPI

GRADING PERMIT APPLICATION

1. That the contractor obtain a City Business License.

2. That the contractor provide proof of insurance for Workmans Comp and General Liability.

3. Application fee in the amount of ____$313.00_____ and *Plan Check Fees as stated below made payable to the City of Tehachapi.

4. That four (4) sets of plans with wet signatures from the developers engineer are provided for plan check.

5. That two (2) soils reports from the developers engineer are provided for plan check.

6. Prior to the issuance of a Grading Permit Building Permit fees must be paid to the City of Tehachapi.

I hereby agree to conditions set forth herein.

_____ _____

Signature Date

Grading Plan Check

Commercial or multiple family project (5 acres or less)	*** $600**
Commercial or multiple family project (over 5 acres)	*** $600 plus $30 per gross acre**
Tract Map / Parcel Map	*** $600 plus $30 per gross acre**

*** Plus 15% admin fee**

CITY OF TEHACHAPI
FEE SCHEDULE FOR PLAN CHECK SERVICES

Effective January 1, 2011

The work will consist of a first, second, and third plan check to be accomplished in accordance with the following schedule:

- **First Plan Review** to be completed with redlined drawings and comments not more than **12** working days from the date of receipt.

- **Second Plan Review** to be completed with redlined drawings and comments not more than **8** working days from the date of receipt of the second submittal. It is expected that modifications, other than those necessary in response to comments provided in the First Plan review, will be minor in nature. Major changes may require additional review time not to exceed **12** working days.

- **Final (Third) Plan Review** to be completed not more that **8** working days from the date of receipt of the third submittal. It is expected that all modifications noted in the First and Second Reviews will be complete. *Further changes may require additional reviews on a time and materials basis.

- **Planning and Public Works Plan Check:** Staff will review the plans for general conformance with the Conditions of Approval, City of Tehachapi Subdivision and Development Standards, and written agreements related to the project. Additionally, staff will review the design drawings, accompanying reports, and project documentation to verify the final engineering designs comply with the intent of the Conditions of Approval and that the infrastructure to be constructed is a functional component of the larger regional system to which it connects.

- **Building Plan Check:** Staff will review the plans for general conformance with the California Building Code including applicable local modifications and Title 24 energy calculations.

Costs for additional plan checks will be charged in accordance with the current City Engineer rate schedule.

CITY OF TEHACHAPI APPLICATION FOR

LOT LINE ADJUSTMENT

PARCEL MAP WAIVER

PARCEL MERGER

I_____being the Owner, or Authorized Agent, of the following described property_____

(Give Legal Description)

_____

_____

do hereby make application to the City of Tehachapi for a Lot Line Adjustment/Parcel Map Waiver provided by Ordinance 90-13-575.

This application is accompanied by the following:

1. An application fee in the amount of **$390.00**.
2. A Plan Check Fee in the amount of **$700.00** per the Fee Schedule and an admin fee of **$105.00** for Plan Check Services attached hereto.
3. Three (3) copies of a map showing the property to be subdivided. Map to be certified as to accuracy by a registered engineer or licensed surveyor.
4. Title report (Less than 30 days old).

Date:_____ Signed:_____

_____
Address

_____ _____
Phone Email

CITY OF TEHACHAPI
FEE SCHEDULE FOR PLAN CHECK SERVICES

Effective January 1, 2011

The work will consist of a first, second, and third plan check to be accomplished in accordance with the following schedule:

- **First Plan Review** to be completed with redlined drawings and comments not more than **12** working days from the date of receipt.

- **Second Plan Review** to be completed with redlined drawings and comments not more than **8** working days from the date of receipt of the second submittal. It is expected that modifications, other than those necessary in response to comments provided in the First Plan review, will be minor in nature. Major changes may require additional review time not to exceed **12** working days.

- **Final (Third) Plan Review** to be completed not more that **8** working days from the date of receipt of the third submittal. It is expected that all modifications noted in the First and Second Reviews will be complete. *Further changes may require additional reviews on a time and materials basis.

- **Planning and Public Works Plan Check:** Staff will review the plans for general conformance with the Conditions of Approval, City of Tehachapi Subdivision and Development Standards, and written agreements related to the project. Additionally, staff will review the design drawings, accompanying reports, and project documentation to verify the final engineering designs comply with the intent of the Conditions of Approval and that the infrastructure to be constructed is a functional component of the larger regional system to which it connects.

- **Building Plan Check:** Staff will review the plans for general conformance with the California Building Code including applicable local modifications and Title 24 energy calculations.

****Costs for additional plan checks will be charged in accordance with the current City Engineer rate schedule.***

CITY OF TEHACHAPI

APPLICATION FOR REZONING

WE, THE UNDERSIGNED property owners hereby request the Rezoning of the following described property from_____ District to_____

THE LEGAL DESCRIPTION (As shown on Deed, Official Records or Title Report) is:

NOTE: If more than one (1) Zone Change is being requested, describe each parcel separately and indicate Zone requested for each.

Assessor's Parcel Number_____ Acreage_____

Is the site on the Cortese List? Yes No

The following attachments are mandatory for this application to be processed:

A. PROPERTY MAP – (Assessors Parcel Map, Title Map or Subdivision Map.) Drawn to scale and sufficiently legible to verify accuracy of legal descriptions submitted above.

B.

Filing Fee:	$1,629.00
Public Hearing Fee	$130.00
Property Owner Notification Fee	$25.00
Negative Declaration	$3,190.00
Fish & Game Neg Dec	$2,156.25
Fish & Game EIR	$2,995.25
County Clerk Recording Fee	$50.00
Scan Approved Plan on CD	$11.00 First Page
Additional Pages	$3.00 per page

As part of the review process of your project, you will be required to post signs on your property giving notice of your proposal. A Posting Public Hearing Signs Application must be submitted with this application

PLEASE READ CAREFULLY BEFORE SIGNING OR FILING:

Submission of this application does not imply approval of Rezoning by the Planning Department.

Applicant_____Signature_____
(Please Print or Type)

Address_____Phone_____

Record Owner_____Signature_____
(Please Print or Type)

Address_____Phone_____

TEHACHAPI PLANNING COMMISSION

PLEASE COMPLETE THE FOLLOWING INFORMATION

I. GENERAL INFORMATION:

1. Existing Zoning:_____

2. Present Land Use:_____

3. Surrounding Land Use:

   North:_____

   South:_____

   East:_____

   West:_____

4. General Plan Designation:_____

PROCESSING COSTS:

The City of Tehachapi operates on the basis of full cost recovery for the processing of planning projects. Owner/Applicant will be billed for the full cost of engineering services plus a 15% administrative fee.

Invoices are due and payable upon receipt. Owner/Applicant will receive a past due notice for invoices that are not paid within a 30 day period and work will be ceased if invoices are not paid by the next billing cycle. If invoices exceed the 60 day period the account will be subject to collections.

CERTIFICATION:

I hereby certify that I understand the retainer and billing procedure referenced in this application. The property owner further certifies that they are legal owner of the property and consent to the application.

_____	_____
Applicant's signature	Property owner's signature
_____	_____
Applicant's printed name	Property owner's printed name
_____	_____
Date	Date

TEHACHAPI
CALIFORNIA

CITY OF TEHACHAPI PLANNING DEPARTMENT
APPLICATION FOR TENTATIVE SUBDIVISION

We, the undersigned Property Owners of the property described below, do hereby apply for approval of a proposed subdivision.

The Legal Description (As shown on Deed, Official County Records, or Title Report) is:_____

_____

_____

_____

The following attachments are mandatory for this application to be processed.

A. **NINE COPIES ONE 8½ X 11 AND AN ELECTRONIC PDF FILE ON CD OF THE SUBDIVISION MAP CONTAINING INFORMATION REQUIRED ON EXHIBIT "A" ATTACHED.**

B.

FILING FEE:	$3,720.00
Public Hearing Fee	$130.00
Property Owner Notification Fee	$25.00
Negative Declaration	$3,190.00
County Clerk Recording Fee	$50.00
Department of Fish and Game	$2,010.25 (Neg Dec)
Department of Fish and Game	$2,768.25 (EIR)

As part of the review process of your project, you will be required to post signs on your property giving notice of your proposal. Attached is the Posting Public Hearing Signs Application

Applicant: _____

Signature: _____

Address: _____

Phone/Email: _____

Record Owner _____

Signature: _____

Address: _____Phone:_____

PROCESSING COSTS:

The City of Tehachapi operates on the basis of full cost recovery for the processing of planning projects. A $20,000.00 retainer fee is required at the time your application is submitted. Owner/Applicant will be billed for the full cost of engineering services plus a 15% administrative fee. At the time of project completion, assuming there are no outstanding invoices, the retainer will be paid back in full to the Owner/Applicant within 60 days.

Invoices are due and payable upon receipt. Owner/Applicant will receive a past due notice for invoices that are not paid within a 30 day period and work will be ceased if invoices are not paid by the next billing cycle. If invoices exceed the 60 day period the account will be subject to collections.

CERTIFICATION:

I hereby certify that I understand the retainer and billing procedure referenced in this application. The property owner further certifies that they are legal owner of the property and consent to the application.

_____	_____
Applicant's signature	Property owner's signature
_____	_____
Applicant's printed name	Property owner's printed name
_____	_____
Date	Date

EXHIBIT "A"

FORM OF TENTATIVE SUBDIVISION

The tentative map shall be legibly drawn of sufficient size to show the details of the plan clearly and shall contain the following information:

1. The tract/parcel number as obtained from the County Recorder;

2. Sufficient description to define the location and boundaries of the proposed subdivision/parcel map; gross area in acres; Assessor's Parcel Number;

3. Name and address of record owner or owners;

4. Name and address of the subdividers;

5. Name and address of engineer or surveyor responsible for preparation of said map with his/her stamp and signature (Sec. 8761, L.S. Act);

6. Locations, names, and present widths of adjacent streets, highways and ways;

7. Locations, names and widths of all existing and proposed streets, highways, and ways in the subdivision/parcel map to be offered for dedication, and proposed improvements thereto;

8. Locations and widths of all existing or proposed easements for drainage, sewage, public utilities, private water lines and ditches and irrigation canals or conduits;

9. Adjacent subdivision maps;

10. Approximate radius of each curve and its interior angle;

11. Number and dimensions of all lots;

12. Approximate location of area subject to inundation or storm water overflow, and the location, width, and direction of flow of all water courses in and adjacent to the subdivision;

13. Plan and easements for drainage and for handling storm water;

14. Names of power, phone, gas and cable t.v. companies;

15. Source of water supply;

16. Method of sewage and sewage disposal;

17. Existing use or uses of the property and, to scale the outline of all existing buildings, structures, well, septic systems, pipelines, waterlines, sewerlines, utilities, trees and fences and their locations in relation to existing or proposed streets and lot lines;

18. Statement of present use zone and proposed use or uses of the property; General Plan designation;

19. Proposed public areas for parks and playgrounds;

20. Sufficient elevations or contour to determine the general slope of the land and the high and low points thereof;

21. Show proposed drainage with direction arrows, catch basins, cross gutters, storm drainpipes and sumps;

22. Location of any Special Studies Zone – Alquist Priolo;

23. Letter of Authorization from property owner if he/she is not the subdivider.

ITEMS TO BE SUBMITTED WITH TENTATIVE SUBDIVISION:

1. Preliminary Title Report – not over 30 days old.

2. Preliminary Soils Report.

3. Checking Fees.

4. Planning Department Application.

5. Request for Variances.

CITY OF TEHACHAPI PLANNING DEPARTMENT
APPLICATION FOR TENTATIVE PARCEL MAP

We, the undersigned Property Owners of the property described below, do hereby apply for approval of a proposed subdivision.

The Legal Description (As shown on Deed, Official County Records, or Title Report) is:_____

_____

_____

_____

The following attachments are mandatory for this application to be processed.

A. **NINE COPIES AND ONE 8½ X 11 OF SUBDIVISION MAP CONTAINING INFORMATION REQUIRED ON EXHIBIT "A" ATTACHED AND ONE (1) 8½ X 11 LOCATION MAP.**

B.

FILING FEE:	$2,954.00
Plan Check Services	$1,300.00
Admin Fee	$195.00
Public Hearing Fee	$130.00
Property Owner Notification Fee	$25.00
Negative Declaration	$3,190.00
County Clerk Recording Fee	$50.00
Fish & Game Neg Dec	$2,156.25
Fish & Game EIR	$2,995.25

As part of the review process of your project, you will be required to post signs on your property giving notice of your proposal. A Posting Public Hearing Signs Application must be submitted with this application

Is the site on the Cortese List? Yes No

Applicant: _____

Signature: _____

Address: _____

Phone/Email: _____

Record Owner _____

Signature: _____

Address: _____Phone:_____

CERTIFICATION:

I hereby certify that I understand the Fee Schedule for Plan Check Services referenced in this application. The property owner further certifies that they are legal owner of the property and consent to the application.

_____	_____
Applicant's signature	Property owner's signature
_____	_____
Applicant's printed name	Property owner's printed name
_____	_____
Date	Date

CITY OF TEHACHAPI
FEE SCHEDULE FOR PLAN CHECK SERVICES

Effective January 1, 2011

The work will consist of a first, second, and third plan check to be accomplished in accordance with the following schedule:

- **First Plan Review** to be completed with redlined drawings and comments not more than **12** working days from the date of receipt.

- **Second Plan Review** to be completed with redlined drawings and comments not more than **8** working days from the date of receipt of the second submittal. It is expected that modifications, other than those necessary in response to comments provided in the First Plan review, will be minor in nature. Major changes may require additional review time not to exceed **12** working days.

- **Final (Third) Plan Review** to be completed not more that **8** working days from the date of receipt of the third submittal. It is expected that all modifications noted in the First and Second Reviews will be complete. *Further changes may require additional reviews on a time and materials basis.

- **Planning and Public Works Plan Check:** Staff will review the plans for general conformance with the Conditions of Approval, City of Tehachapi Subdivision and Development Standards, and written agreements related to the project. Additionally, staff will review the design drawings, accompanying reports, and project documentation to verify the final engineering designs comply with the intent of the Conditions of Approval and that the infrastructure to be constructed is a functional component of the larger regional system to which it connects.

- **Building Plan Check:** Staff will review the plans for general conformance with the California Building Code including applicable local modifications and Title 24 energy calculations.

Costs for additional plan checks will be charged in accordance with the current City Engineer rate schedule.

EXHIBIT "A"

FORM OF TENTATIVE MAP

The tentative map shall be legibly drawn of sufficient size to show the details of the plan clearly and shall contain the following information:

1. The tract/parcel number as obtained from the County Recorder;

2. Sufficient description to define the location and boundaries of the proposed subdivision/parcel map; gross area in acres; Assessor's Parcel Number;

3. Name and address of record owner or owners;

4. Name and address of the subdividers;

5. Name and address of engineer or surveyor responsible for preparation of said map with his/her stamp and signature (Sec. 8761, L.S. Act);

6. Locations, names, and present widths of adjacent streets, highways and ways;

7. Locations, names and widths of all existing and proposed streets, highways, and ways in the subdivision/parcel map to be offered for dedication, and proposed improvements thereto;

8. Locations and widths of all existing or proposed easements for drainage, sewage, public utilities, private water lines and ditches and irrigation canals or conduits;

9. Adjacent subdivision maps;

10. Approximate radius of each curve and its interior angle;

11. Number and dimensions of all lots;

12. Approximate location of area subject to inundation or storm water overflow, and the location, width, and direction of flow of all water courses in and adjacent to the subdivision;

13. Plan and easements for drainage and for handling storm water;

14. Names of power, phone, gas and cable t.v. companies;

15. Source of water supply;

16. Method of sewage and sewage disposal;

17. Existing use or uses of the property and, to scale the outline of all existing buildings, structures, well, septic systems, pipelines, waterlines, sewer lines, utilities, trees and fences and their locations in relation to existing or proposed streets and lot lines;

18. Statement of present use zone and proposed use or uses of the property; General Plan designation;

19. Proposed public areas for parks and playgrounds;

20. Sufficient elevations or contour to determine the general slope of the land and the high and low points thereof;

21. Show proposed drainage with direction arrows, catch basins, cross gutters, storm drainpipes and sumps;

22. Location of any Special Studies Zone – Alquist Priolo;

23. Letter of Authorization from property owner if he/she is not the subdivider.

ITEMS TO BE SUBMITTED WITH TENTATIVE MAP:

1. Preliminary Title Report – not over 30 days old.

2. Preliminary Soils Report.

3. Checking Fees.

4. Planning Department Application.

5. Request for Variances.

CITY OF TEHACHAPI PLANNING DEPARTMENT
APPLICATION FOR TENTATIVE TRACT MAP

We, the undersigned Property Owners of the property described below, do hereby apply for approval of a proposed subdivision.

The Legal Description (As shown on Deed, Official County Records, or Title Report) is:_____

_____

_____

_____

The following attachments are mandatory for this application to be processed.

A. **NINE COPIES AND ONE 8½ X 11 OF SUBDIVISION MAP CONTAINING INFORMATION REQUIRED ON EXHIBIT "A" ATTACHED (1) 8½ X 11 LOCATION MAP.**

B.

FILING FEE:	$3,720.00
Plan Check Services	$1,600.00
Admin Fee	$240.00
Public Hearing Fee	$130.00
Property Owner Notification Fee	$25.00
Negative Declaration	$3,190.00
County Clerk Recording Fee	$50.00
Fish & Game Neg Dec	$2,156.25
Fish & Game EIR	$2,995.25

As part of the review process of your project, you will be required to post signs on your property giving notice of your proposal. A Posting Public Hearing Signs Application must be submitted with this application

Is the site on the Cortese List? Yes No

Applicant: _____

Signature: _____

Address: _____

Phone/Email: _____

Record Owner _____

Signature: _____

Address: _____Phone:_____

CERTIFICATION:

I hereby certify that I understand the Fee Schedule for Plan Check Services referenced in this application. The property owner further certifies that they are legal owner of the property and consent to the application.

_____	_____
Applicant's signature	Property owner's signature
_____	_____
Applicant's printed name	Property owner's printed name
_____	_____
Date	Date

CITY OF TEHACHAPI
FEE SCHEDULE FOR PLAN CHECK SERVICES

Effective January 1, 2011

The work will consist of a first, second, and third plan check to be accomplished in accordance with the following schedule:

- **First Plan Review** to be completed with redlined drawings and comments not more than **12** working days from the date of receipt.

- **Second Plan Review** to be completed with redlined drawings and comments not more than **8** working days from the date of receipt of the second submittal. It is expected that modifications, other than those necessary in response to comments provided in the First Plan review, will be minor in nature. Major changes may require additional review time not to exceed **12** working days.

- **Final (Third) Plan Review** to be completed not more that **8** working days from the date of receipt of the third submittal. It is expected that all modifications noted in the First and Second Reviews will be complete. *Further changes may require additional reviews on a time and materials basis.

- **Planning and Public Works Plan Check:** Staff will review the plans for general conformance with the Conditions of Approval, City of Tehachapi Subdivision and Development Standards, and written agreements related to the project. Additionally, staff will review the design drawings, accompanying reports, and project documentation to verify the final engineering designs comply with the intent of the Conditions of Approval and that the infrastructure to be constructed is a functional component of the larger regional system to which it connects.

- **Building Plan Check:** Staff will review the plans for general conformance with the California Building Code including applicable local modifications and Title 24 energy calculations.

Costs for additional plan checks will be charged in accordance with the current City Engineer rate schedule.

EXHIBIT "A"

FORM OF TENTATIVE MAP

The tentative map shall be legibly drawn of sufficient size to show the details of the plan clearly and shall contain the following information:

1. The tract/parcel number as obtained from the County Recorder;

2. Sufficient description to define the location and boundaries of the proposed subdivision/parcel map; gross area in acres; Assessor's Parcel Number;

3. Name and address of record owner or owners;

4. Name and address of the subdividers;

5. Name and address of engineer or surveyor responsible for preparation of said map with his/her stamp and signature (Sec. 8761, L.S. Act);

6. Locations, names, and present widths of adjacent streets, highways and ways;

7. Locations, names and widths of all existing and proposed streets, highways, and ways in the subdivision/parcel map to be offered for dedication, and proposed improvements thereto;

8. Locations and widths of all existing or proposed easements for drainage, sewage, public utilities, private water lines and ditches and irrigation canals or conduits;

9. Adjacent subdivision maps;

10. Approximate radius of each curve and its interior angle;

11. Number and dimensions of all lots;

12. Approximate location of area subject to inundation or storm water overflow, and the location, width, and direction of flow of all water courses in and adjacent to the subdivision;

13. Plan and easements for drainage and for handling storm water;

14. Names of power, phone, gas and cable t.v. companies;

15. Source of water supply;

16. Method of sewage and sewage disposal;

17. Existing use or uses of the property and, to scale the outline of all existing buildings, structures, well, septic systems, pipelines, waterlines, sewer lines, utilities, trees and fences and their locations in relation to existing or proposed streets and lot lines;

18. Statement of present use zone and proposed use or uses of the property; General Plan designation;

19. Proposed public areas for parks and playgrounds;

20. Sufficient elevations or contour to determine the general slope of the land and the high and low points thereof;

21. Show proposed drainage with direction arrows, catch basins, cross gutters, storm drainpipes and sumps;

22. Location of any Special Studies Zone – Alquist Priolo;

23. Letter of Authorization from property owner if he/she is not the subdivider.

24. Minimum lot size.

25. Maximum lot size.

26. Lot average.

ITEMS TO BE SUBMITTED WITH TENTATIVE MAP:

1. Preliminary Title Report – not over 30 days old.

2. Preliminary Soils Report.

3. Checking Fees.

4. Planning Department Application.

5. Request for Variances.

6. Environmental Information Form.

CITY OF TEHACHAPI
SIGN PERMIT APPLICATION

$469.00 FEE

*Applicant:*_____

*Mailing Address:*_____

*Phone Number:(__)_____Fax Number:(__)_____Email:*_____

Property Owner Approval

*Name:*_____

*Address:*_____

*Property Owner Signature:*_____

*Sign Location:*_____*Zoning District*_____

*Type of Sign (Fascia, Monument, etc.):*_____

*Sign Dimensions:*_____=_____*square feet*
_____=_____*square feet*
_____ =_____*square feet*

*Sign Colors:*_____

OFFICE USE ONLY

*Sign Ordinance Section:*_____

Approval Signature:

_____*Date*_____

Receipt No.: _____ *$* _____

SUBMIT THREE COLOR COPIES

APPENDIX C
CHECKLIST

City of Tehachapi
Subdivision and Development Standards
Improvements Inspection Checklist

The following checklist represents a list of the most common items of work that will require City furnished inspection / observation. The Owner/Developer shall request inspection of any and all work related to the listed items a minimum of 48 hours prior to performing the work. The City reserves the right to perform inspections/observations on any item not covered by this checklist.

Division Two – Grading and Drainage

1. Grading (Refer to Division Five For Additional Requirements)
    a. Compaction and Slope Verification for Easements Behind Sidewalk
    b. Erosion Control Plan Monitoring – As Required
    c. SWPPP Monitoring – As Required

2. Pipe Trench – Strom Drain Construction
    a. Alignment
    b. Depth
    c. Pipe Bedding
    d. Pipe Slope
    e. Utility Clearance Inspections
    f. Pipe Zone Backfilling and Compaction
    g. Trench Zone Backfilling and Compaction
    h. Street Zone Backfilling and Compaction
    i. Trench Plating (If Applicable)
    j. Trench Pavement Patch (If Applicable)
        i. Subgrade Preparation (Compaction Testing)
        ii. Aggregate Base Placement
        iii. AC Pavement Installation
        iv. T-Top Installation

3. Pipe (Storm Drain)
    a. Material Delivery Specification Compliance Verification
    b. Pipe Assembly (Joint Installation)
    c. Slope Verification
    d. Verification of Pipe Clearance from Potable Water Pipelines
    e. Pipe Zone Backfilling Procedures
    f. Storm Drain Pipe Identification Tape Installation
    g. Tracer Wire Installation
    h. Testing
        i. Leakage Testing

4. Manholes / Catch Basins
    a. Location
    b. Base Excavation
    c. Base Subgrade Preparation
    d. Concrete Forms Set Up
    e. Reinforcement Placement
    f. Pipe Invert Verification Prior to Pouring
    g. Manhole Soffit Matching (When Installing Different Diameter Pipes) Verification
    h. Concrete Placement (If Required by Field Observer)
    i. Mortar Ledge Installation
    j. Concrete Slump Testing

k. Manhole Collar Installation
l. Mortar Joint Installation
m. Manhole Step Installation
n. Manhole Inspection of Connecting Pipelines
o. Manhole Debris Cleanup Inspection prior to Backfilling
p. Manhole Backfilling Procedures
q. Manhole Frame and Cover Installation Including Re-Compaction Testing Around Manhole
r. Leakage Testing

5. Basins
   a. Visual (Quality)Inspection of Side Slopes and Basin Depth
   b. Erosion Control Monitoring for Basin Sides
   c. Access Roads and Ramp Construction Including Compaction Testing
   d. Basin Sterilization
   e. Outlet Structure Installation
      i. Location
      ii. Basin Piping Installation
      iii. Outlet Base Excavation
      iv. Base Subgrade preparation (Compaction Testing)
      v. Concrete Forms Set Up
      vi. Pipe Invert Verification Prior to Pouring
      vii. Concrete Placement (If Required by Field Observer)
      viii. Concrete Slump Testing
      ix. Pipe Grill Installation

6. Site Perimeter Fencing
   a. Alignment
   b. Foundation Excavation
   c. Foundation Subgrade Preparation
   d. Reinforcement Placement
   e. Concrete Pouring
   f. Concrete Slump Testing
   g. Masonry Cell Grouting Inspection
   h. Final Wall Visual (Quality) Inspection

Division Three – Sewer System

1. Pipe Trench
   a. Alignment
   b. Depth
   c. Pipe Bedding
   d. Pipe Slope
   e. Utility Clearance Inspections
   f. Sewer Pipe Identification Tape Installation
   g. Pipe Zone Backfilling and Compacting
   h. Trench Zone Backfilling and Compacting
   i. Street Zone Backfilling and Compacting
   j. Trench Plating (If Applicable)
   k. Trench Plating (If Applicable)
   l. Trench Pavement Patch (If Applicable)
      i. Subgrade Preparation
      ii. Aggregate Base Placement
      iii. AC Pavement Installation
      iv. T-Top Installation

2. Pipe
    a. Material Delivery Specification Compliance Verification
    b. Pipe Assembly (Joint Installation)
    c. Slope Verification
    d. Verification of Pipe Clearance from Potable Water Pipelines
    e. Tracer Wire Installation (Force Mains Only)
    f. Pipe Zone Backfilling Procedures
    g. Testing
        i. Air Testing
        ii. Leakage Testing
        iii. Mandrel Testing
        iv. Sewer Cleaning – Balling Procedures
        v. Video Camera Inspection
        vi. Receipt of Pipeline DVD Video

3. Manholes
    a. Location
    b. Manhole Base Excavation
    c. Base Subgrade Preparation
    d. Concrete Forms Set Up
    e. Reinforcement Placement (If applicable)
    f. Pipe Invert Verification Prior to Pouring
    g. Manhole Soffit Matching (when installing different diameter pipes) Verification
    h. Concrete Placement (If Required by Field Observer)
    i. Mortar Ledge Installation
    j. Concrete Slump Testing
    k. Manhole Collar Installation
    l. Mortar Joint Installation
    m. Manhole Step Installation
    n. Manhole Inspection of Connecting Pipes
    o. Manhole Debris Cleanup Inspection prior to Backfilling
    p. Manhole Backfilling Procedures
    q. Manhole Frame and Cover Installation Including Re-Compaction Testing Around Manhole Area
    r. Leakage Testing

4. Laterals
    a. Material Delivery Specification Compliance Verification
    b. Slope Verification
    c. Cover @ Property Line
    d. Property Line Cleanout Installation
    e. Lateral Location Identifier
    f. Trench Backfilling Procedures

5. Cleanouts
    a. Material Delivery Specification Compliance Verification
    b. Concrete Encasement Installation
    c. Cleanout Lid Installation and Marking Verification
    d. Trench Backfilling Procedures

6. Sewer Casing
    a. Material Delivery Specification Compliance Verification
    b. Jacking Pit Excavation and Backfilling Procedures
    c. Casing Installation
    d. Carrier Pipe Installation
    e. Casing Seal Installation
    f. Casing Sand Filling Installation

Division Four – Potable Water System

1. Pipe Trench
    a. Alignment
    b. Depth
    c. Pipe Bedding
    d. Utility Clearance Inspections
    e. Pipe Zone Backfilling
    f. Trench Zone Backfilling
    g. Water Pipe Identification Tape Installation
    h. Street Zone Backfilling
    i. Trench Pavement Patch (If applicable)
        i. Subgrade Preparation
        ii. Aggregate Base Placement
        iii. AC Pavement Installation
        iv. T-Top Installation

2. Pipe
    a. Material Delivery Specification Compliance Verification
    b. Connection to Existing Pipelines
    c. Thrust Block Installations on All Fittings
    d. Restrained Joint Installations (If Applicable)
    e. Pipe Assembly (Joint Installation)
    f. Polyethylene Wrapping of All Ferrous Fittings and Appurtenances
    g. Pipe Zone Backfilling Procedures
    h. Minimum Depth
    i. Potable Water Pipe Identification Tape Installation
    j. Tracer Wire Installation
    k. Testing
        i. Pressure Testing
        ii. Disinfection Testing

3. Water Services
    a. Material Delivery Specification Compliance Verification
    b. Water Main Connection
    c. Water Service Piping Installation
    d. Tracer Wire Installation
    e. Meter Service Box Assembly and Lid Marking Verification and Installation
    f. Trench Backfilling Procedures

4. Fire Hydrants
    a. Material Delivery Specification Compliance Verification
    b. Water Main Connection
    c. Gate Valve Assembly Installation
    d. Polyethylene Wrap of Ferrous Fittings
    e. Concrete Thrust Block Installation
    f. Crushed Rock Installation
    g. Pea Gravel Installation
    h. Trace Wire Installation
    i. Trench Backfilling and Compaction
    j. Fire Hydrant Installation
    k. Leakage Testing (Only Required if Fire Hydrant Adjusted After Field Assembly)
    l. Fire Hydrant Identification Marker Installation
    m. Pressure and Disinfection Testing for Hydrants Connecting to Existing Mains

5. Combination Air Release Valves
    a. Material Delivery Specification Compliance Verification
    b. Water Main connection
    c. Valve Piping Installation
    d. Valve Installation
    e. Valve Box Gravel Base Installation
    f. Valve Box Assembly and Lid Marking Verification and Installation
    g. Trench Backfilling Procedures

6. Misc. Valves
    a. Material Delivery Specification Compliance Verification
    b. Valve Installation
    c. Extension Stem Installation
    d. Polyethylene Wrap
    e. Aggregate Base Placement
    f. Valve Box Assembly Installation and Verification of Lid Marking
    g. Trench Backfilling Procedures

7. Blow Off Assemblies
    a. Material Delivery Specification Compliance Verification
    b. Blow-off Piping Installation
    c. Thrust Block Installation
    d. Valve Box Assembly Installation
    e. Trench Backfilling Procedures
    f. Concrete Collar and Lid Marking Verification and Installation

8. Backflow Preventer
    a. Material Delivery Specification Compliance Verification
    b. Device Installation
    c. Thrust Block Installation
    d. Trench Backfilling Procedures

9. Water Line Casing
    a. Material Delivery Specification Compliance Verification
    b. Jacking Pit Excavation and Backfilling Procedures
    c. Casing Installation
    d. Carrier Pipe installation
    e. Casing Seal Installation
    f. Casing Sand Filling Installation

Division Five – Streets

1. Grading
    a. Street Alignment / Construction Staking
    b. Street Grade Verification
    c. Subgrade Preparation (Compaction Testing)

2. Curb and Gutter
    a. Subgrade Preparation (Compaction Testing)
    b. Concrete Form Set Up
    c. Expansion and Control Joint Installation
    d. Concrete Pouring
    e. Concrete Slump Testing
    f. Concrete Finishing
    g. Visual (Quality) Inspection After Form Removal
    h. Flow Testing

3. Sidewalk
   a. Subgrade Preparation (Compaction Testing)
   b. Concrete Form Set Up
   c. Expansion and Control Joint Installation
   d. Concrete Pouring
   e. Concrete Slump Testing
   f. Concrete Finishing
   g. Slope Verification
   h. Visual (Quality) Inspection After Form Removal

4. AC Pavement
   a. Subgrade Preparation (Compaction Testing)
   b. Subbase Preparation (Compaction Testing)
   c. AC Pavement Installation
   d. Striping
   e. Street Monument and Reflector Placement
   f. Utility Box and Manhole Raising/Lowering Procedures

5. AC Overlay and Patches
   a. Saw Cutting and Grinding Layout Verification
   b. Pavement Grinding Operations
   c. Pavement Saw Cutting Operations
   d. Subgrade Preparation (Compaction Testing)
   e. Subbase Preparation (Compaction Testing)
   f. AC Pavement Installation

6. Driveway Approaches
   a. Subgrade Preparation (Compaction Testing)
   b. Concrete Form Set Up
   c. Driveway Slopes Verification
   d. Concrete Pouring
   e. Concrete Slump Testing
   f. Concrete Finishing
   g. Visual (Quality) Inspection After Form Removal

7. Cross Gutters
   a. Subgrade Preparation (Compaction Testing)
   b. Concrete Form Set Up
   c. Reinforcement Set Up
   d. Concrete Pouring
   e. Concrete Finishing
   f. Cross Gutter Flow Line and Cross Slope Verification
   g. Concrete Slump Testing
   h. Visual (Quality) Inspection After Form Removal

8. Street Sign Posts
   a. Material Delivery Specification Compliance Verification
   b. Location
   c. Footing Excavation
   d. Foundation Construction
   e. Visual (Quality) Inspection

9. Barricade
   a. Material Delivery Specification Compliance Verification
   b. Location

c. Footing Excavation
d. Foundation Construction
e. Visual (Quality) Inspection

10. Medium Curb
    a. Subgrade Preparation (Compaction Testing)
    b. Concrete Form Set Up
    c. Expansion and Control Joint Installation
    d. Concrete Pouring
    e. Concrete Slump Testing
    f. Concrete Finishing
    g. Visual (Quality) Inspection after Form Removal

11. Accessible Ramps
    a. Subgrade Preparation
    b. Concrete Form Set Up
    c. ADA Slope Verification
    d. Curb Height Verification
    e. Concrete Pouring
    f. Concrete Slump Testing
    g. Concrete Finishing
    h. ADA Paver Installation
    i. Visual (Quality) Inspection after Form Removal

12. Street Lights
    a. Location
    b. Footing Excavation
    c. Foundation Construction
    d. Anchor Bolt Placement
    e. Electrical Boxes Installation
    f. Visual (Quality) Inspection

13. Dry Utilities
    a. Compaction Verification along Dry Trench

Division Six – Landscaping for Easements and City Park Facilities

1. Grading
    a. Compaction Testing
    b. Visual (Quality) Inspection

2. Erosion Control Monitoring – As Required by Specific Plan

3. SWPPP Monitoring – As Required by Specific Plan

4. Irrigation System Pipe Trench
    a. Alignment
    b. Depth
    c. Utility Clearance Inspections
    d. Trench Backfilling Procedures

5. Pipe
    a. Material Delivery Specification Compliance Verification
    b. Connection to Existing Pipelines – Service Meter Installation Refer to Division Four Requirements
    c. Pipe Installation Including Laterals, Sprinkler Heads, Bubbler and Other Landscaping Connections Visual Inspection Prior to Backfilling Trench

d. Controller Wire Installation
e. Pipe Utility Clearance Verification
f. Trench Backfilling Procedures

6. Electrical Conduit and Pull Boxes
   a. Material Delivery Specification Compliance Verification
   b. Dry Utility Trench Backfilling Procedures
   c. Electrical Pull Box Assembly Installation and Verification of Lid Markings

7. Backflow Preventer
   a. Material Delivery Specification Compliance Verification
   b. Device Layout Check
   c. Device Installation
   d. Trench Backfilling Procedures

8. Valves
   a. Material Delivery Specification Compliance Verification
   b. Valve Installation
   c. Aggregate Base Placement
   d. Valve Box Assembly Installation and Verification of Lid Marking
   e. Trench Backfilling Procedures

9. Irrigation Controls and Enclosure
   a. Material Delivery Specification Compliance Verification
   b. Concrete Pad Subgrade Preparation
   c. Set Up Concrete Forms
   d. Set Up Enclosure Anchors
   e. Concrete Pad Pouring
   f. Visual (Quality) Inspection of Concrete Pad After Form Removal
   g. Irrigation Controls and Enclosure Installation

10. Tree and Shrub Planting
    a. Material Delivery Specification Compliance Verification
    b. Location
    c. Type and Species
    d. Planting
    e. Staking
    f. Final (Quality) Visual Inspection

11. Landscaping / Retaining Walls
    a. Refer to Division Two Perimeter Fencing Requirement